Field Fixes

common problems in design, fabrication and erection – solutions and prevention

Authors:

James M. Fisher, Ph.D., P.E.
Computerized Structural Design, SC
Milwaukee, WI

Lawrence A. Kloiber, P.E.
LeJeune Steel
Minneapolis, MN

July 25, 2006
Chicago, IL

The information presented herein is based on recognized engineering principles and is for general information only. While it is believed to be accurate, this information should not be applied to any specific application without competent professional examination and verification by a licensed professional engineer. Anyone making use of this information assumes all liability arising from such use.

Copyright © 2006

By

The American Institute of Steel Construction, Inc.

All rights reserved. This document or any part thereof must not be reproduced in any form without the written permission of the publisher.

Field Fixes

common problems in design, fabrication and erection – solutions and prevention

Authors:

James M. Fisher, Ph.D., P.E.
Computerized Structural Design, SC
Milwaukee, WI

Lawrence A. Kloiber, P.E.
LeJeune Steel
Minneapolis, MN

Structural Steel

Design
Fabrication
and Construction Problems

Solutions and Prevention

James M. Fisher, Ph.D., P.E.
Computerized Structural Design
Milwaukee, Wisconsin

Lawrence A. Kloiber, P.E.
LeJeune Steel Co.
Minneapolis, Minnesota

1

Topics

- What to do when notified about a field problem.
- Footings and Anchor Rods.
- Spandrels and Façade.
- Miscellaneous topics and questions.
  - Use of Threaded Studs.
  - What to do about banging bolts?
  - How to resolve a dispute on bolt tightness?
  - Are pour stops a tripping hazard?
  - Steel deck does not fit properly over bolted moment connections.
  - Does incidental corrosion on steel need to be removed?
  - Can open holes be left in members?
  - Use of Mill Reports.

2

Topics

- Connection Fit-up.
- Interference.
- Reinforcing connections.
- Columns.
- Beam line too short after erection.
- Camber.
  - Steel Deck Bearing.
  - Extra concrete due to beam deflection.
  - Floor not level.
- Shear Studs.

3

Topics

- Fabrication and Erection.
- Erection Aids.
- Welding.
- Roof top units (RTU's).
- Joists and Joist Reinforcing.
- Crane Buildings.
- Specifications.
- Design of Connections.
- Other Questions.
- Questions from the Audience.

4

What to do when notified about a field problem.

- Make sure you have complete and accurate information.
- Act immediately to avoid delay charges.
- Try to determine the cause of the problem.
- Is a fix required? (If no money is spent on a fix then there will be no argument as to who pays).
- Think about labor costs in fixes, material is cheap.
- Discuss required paperwork to satisfy all parties involved.
- Discuss your fee and how it will be paid.

5

General Comment

- Often the field work details are proposed by the steel fabricator or the erector.
- The proposal may be one that was used in the past by the fabricator/erector, but may not be adequate for the conditions on your project.

6

Footings and Anchor Rods

7

What is the proper specification for anchor rods?

ASTM F1554.

Two items of particular interest in 1554 relate to:

- **Classification, and**
- **Product Marking (color coating)**

Consider using epoxy anchors on fast track and complex layout projects.

8

ASTM 1554 - Classifications

- Anchor rods furnished to the ASTM 1554 Specification can be obtained in three grades which denote three steel yield strengths, they are to be color coated as shown:
  - 36 ksi - Blue
  - 55 ksi – Yellow *
  - 105 ksi - Red

The 36 ksi rods, and the 55 ksi rods, can be obtained in diameters up to 4 in. The 105 ksi rods can be obtained up to 3 in. diameters.

*Supplement S1 for weldable material.

9

ANCHOR ROD
ERECTION REQUIREMENTS
PER OSHA 1926.75

- Minimum of 4 anchor rods
- Designed for a minimum load of 300 lbs at 18-inches eccentric from any column face
- Anchor rods shall not be repaired or replaced or field modified without the approval of SEOR
- Approval must state if repair/modification shall require guying or bracing of the column
- Contractor shall provide written notification to erector of any repair or modification

10

Anchor rods in wrong position

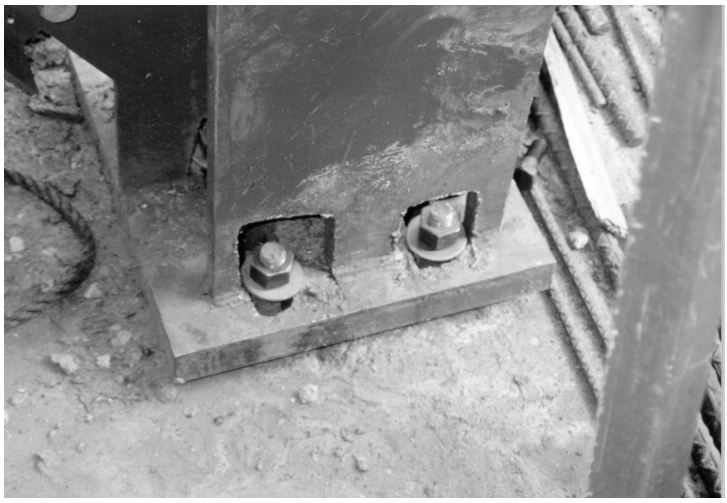

11

Anchor rods in wrong position

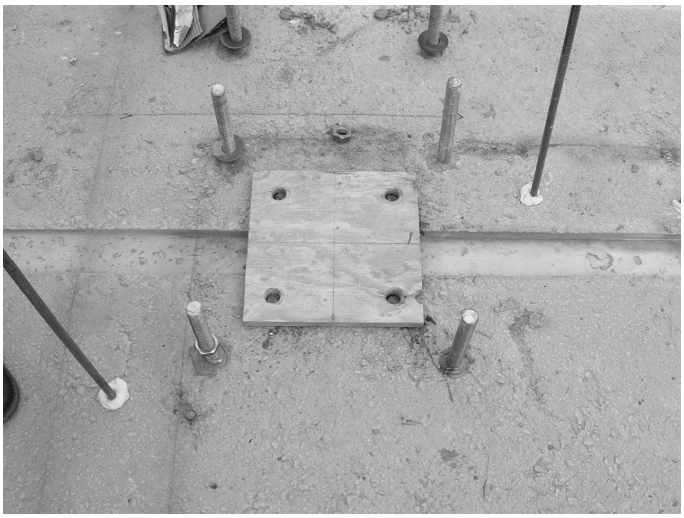

12

Anchor rods in wrong position

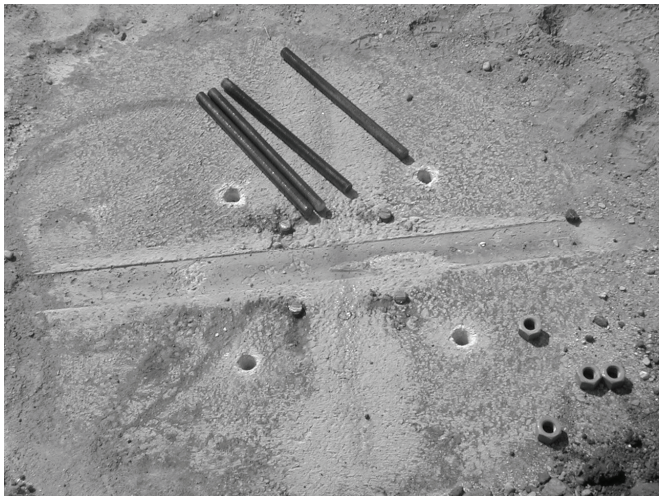

13

Anchor rods in wrong position

Solutions:

1. Evaluate the need for the anchor rods.
2. Cut rods and use epoxy anchors.
3. Cut base plate and use plate washers.
4. Fabricate new base plate.
5. Relocate column on base plate.
6. Modify column web or flange as required.
7. Bend rods into position, may require chipping of concrete.

14

Anchor rods in wrong position

Epoxy Anchors:

Consider the use of the Hilti HIT-TZ:

Available up to ¾ inches in diameter.
With an embedment of 5.25 inches in 4000 psi concrete, the design tensile strength of a ¾ in. Hilti HIT-TZ is 12,630 lbs.

With proper embedment the design tensile strength of a ¾ in. ASTM 1554, 36 ksi anchor rod is 14,310 lbs.

See IBC for Special Inspection.
Consider proof loading.
For more information www.us.hilti.com

15

Anchor rods in wrong position

Prevention:

1. **Use a qualified field engineer to layout the anchor rods.**
2. **Survey before column fabrication.**
3. **Use AISC recommended hole sizes.**
4. **Use symmetric patterns for the anchor rods.**
5. **Use wood or steel templates firmly fastened to the footing or pier forms.**

16

Anchor rods in wrong position

AISC Anchor Rod Hole Sizes:

The recommended anchor rod hole diameters and minimum washer diameters and thicknesses can be found on page 14-21 of the AISC 13th edition Steel Construction Manual. The sizes are shown below:

Anchor Rod Diameter, in.	Hole Diameter, In.	Min. Washer Diameter, in.
3/4	1- 5/16	1- 7/8
7/8	1- 9/16	2- 1/4
1	1- 13/16	2- 5/8
1- 1/4	2- 1/16	2- 7/8
1- 1/2	2- 5/16	3- 1/8
1- 3/4	2- 3/4	3- 3/4
2	3-1/4	4- 1/2
2- 1/2	3-3/4	5

17

Field survey of anchor rods

18

Shop rework of column & base plate

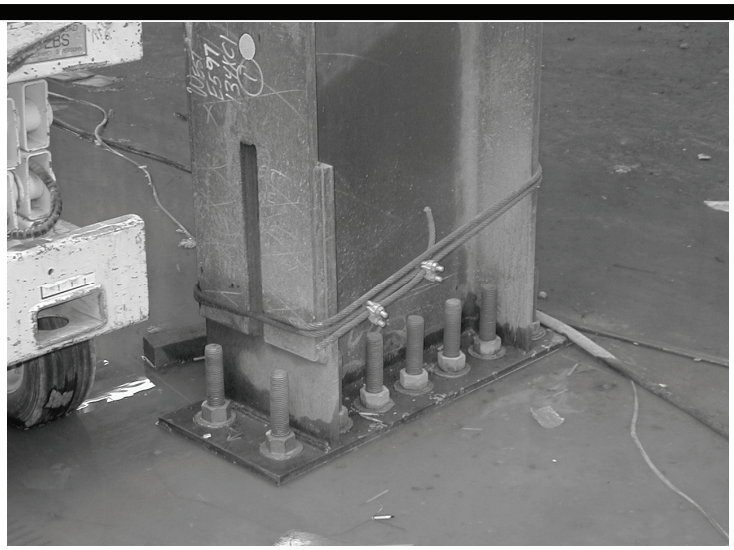

19

Anchor rods too short

20

Anchor rods too short

Solutions:

1. Extend by welding a threaded rod.
2. Use a coupling nut.
3. Cut and use epoxy anchors.
4. Weld base plate to rods (not high for strength rods).
   OSHA requirements of guying the column or holding the column with the crane must be followed until four anchor rods are secured.
5. Perform analysis for nut using the threads engaged.

Prevention:

1. Provide a design with ample length, and ample thread length.
2. Do not use high strength steel anchor rods, use larger diameter rods.

21

ANCHOR ROD SPLICE
Groove Weld

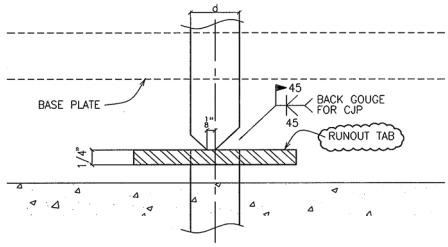

DETAIL

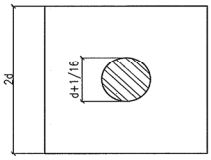

SECTION

NOTE: CAN TRIM & GRIND RUN OFF TAB AFTER WELDING IF RQ'D.
MATERIAL: F1554-36 & 55 WITH SUPPLEMENT S1.

22

ANCHOR ROD SPLICE
Flare Groove Weld

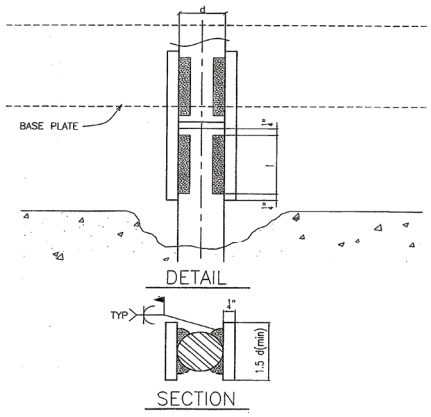

Pa = 13.1 (ld) - ASD
ϕRn = 19.7 (ld) - LRFD
Material F1554 – Gr 36 or Gr 55 with S1

ANCHOR ROD SPLICE
Coupling Nut

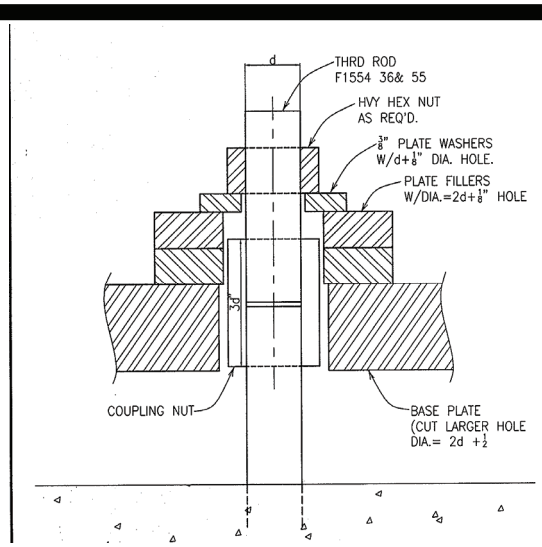

ANCHOR RODS TOO SHORT
COUPLING NUT FIX

25

ANCHOR ROD TOO SHORT
COUPLING NUT FIX

26

Anchor rods too long

27

Anchor rods too long

Solutions:

1. Provide washers.
2. Weld rods to base plate if insufficient thread length exists. Use plate washer for large hole
3. Thread in place.

Prevention:

Provide plenty of extra threads.

Comment:

Since the rod(s) are too long, check for proper embed distance.

28

Anchor rods bent or not plumb

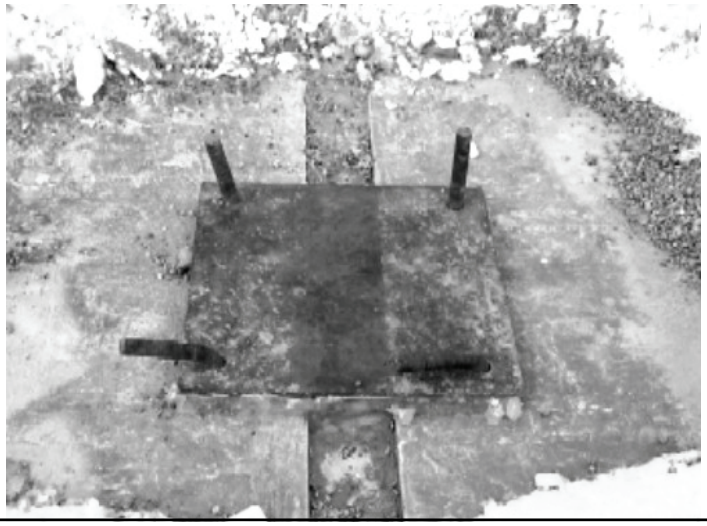

29

Anchor rods bent or not plumb

Solutions:

1. Cold bend.
2. Heat and straighten.
3. If high strength anchor rods - replace.

Prevention:

1. Don't use high strength rods.
2. Provide protection for rods during construction.

30

Anchor rods broken

Solutions:

1. Evaluate the need for the anchor rods.
2. Use epoxy anchors in place of broken anchor rods. This will require new locations for the rods.

Prevention:

Provide protection for rods during construction.

31

Anchor rod pattern rotated 90 degrees

Solutions:

Solutions similar to all of the previous solutions.

Prevention:

Design the same pattern both directions.

32

Column base plate punches through leveling nuts

Solution:

Jack column and grout.

Prevention:

1. Use large thick washers when using leveling nuts.
2. Specify proper grouting time in specifications.
3. Use shim stock instead of leveling nuts for large loads.

33

Spandrels and Façade

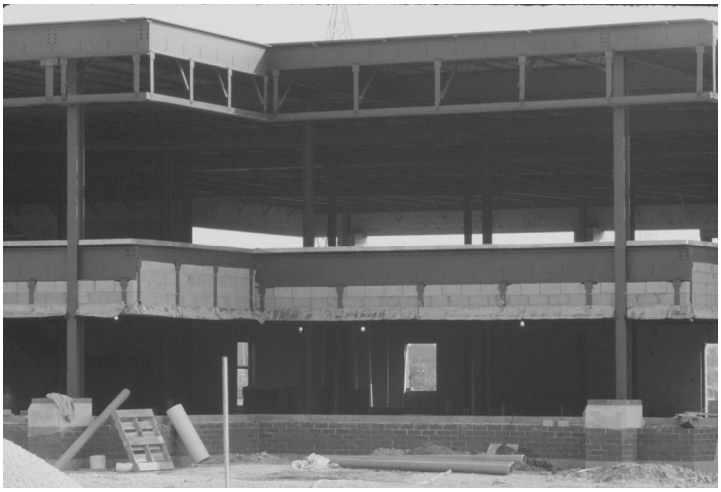

34

Spandrel Systems

Principle Areas of Concern

1. Projection
2. Deflections
3. Tolerances

35

Spandrel too far out or in

Solutions:

1. Redesign connection.
2. If spandrel beam has sweep, heat straighten or jack into position.
3. Provide braces to pull or push the spandrel into proper position.

Prevention:

1. Provide adjustable connections.
2. Check plumbness as erected.
3. Provide adequate bracing for the spandrels and design stiff beams.

36

Spandrel Detail – Not Recommend

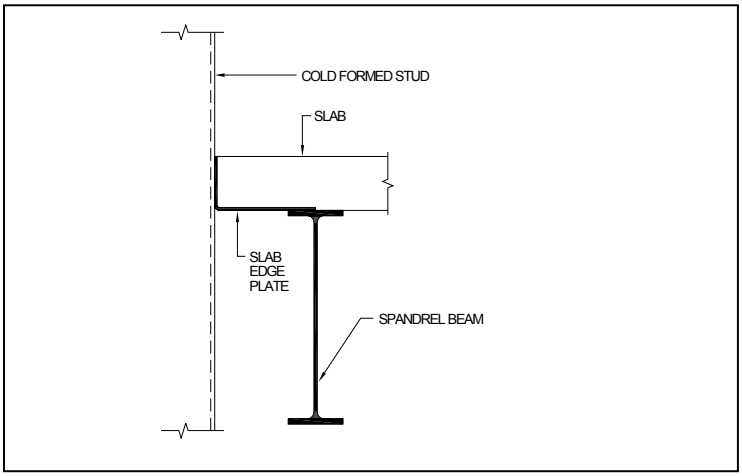

37

Spandrel Detail - Recommended

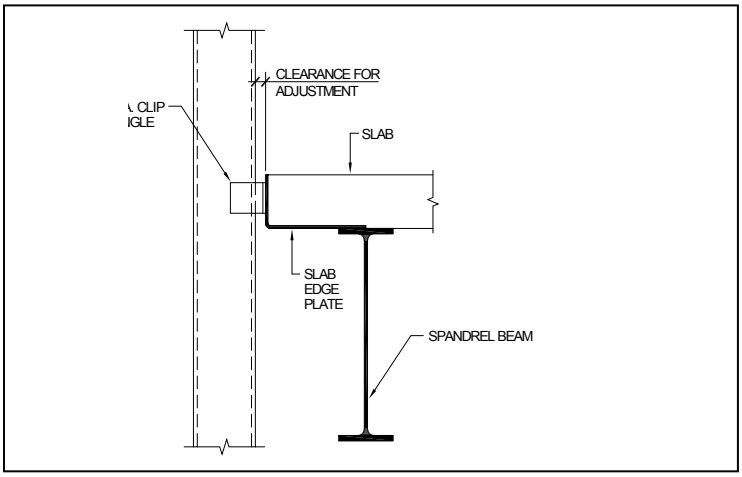

38

Spandrel Detail – Not Recommended

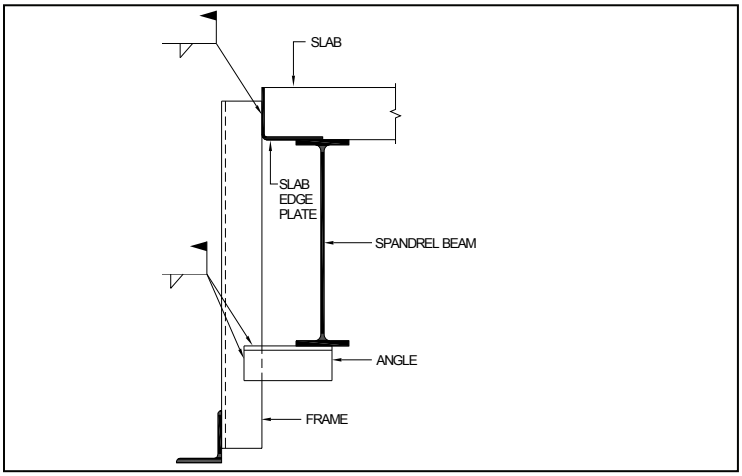

39

Spandrel Detail - Recommended

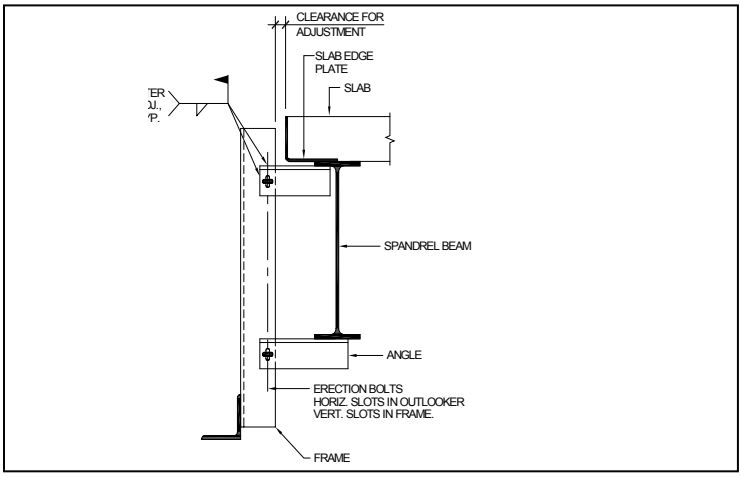

40

Spandrel Detail – Not Recommended

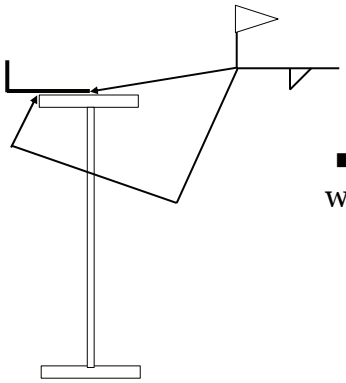

- Use stitch weld topside only

41

Façade moves or twists during erection

Solution:

Provide proper bracing and resume erection.

Prevention:

Design proper bracing and stiffness controls. See AISC Design Guide 3 on "Serviceability of Low-Rise Buildings".

42

Serviceability Considerations

$\Delta_{DL} < 3/8''$ (Prior to Setting)

$\Delta_{DL} + \Delta_{WALL} <$ L/480 or 5/8"

$\Delta_{DL} + \Delta_{WALL} <$ L/600 or 3/8" *

$\Delta_{LL} <$ L/360 or 1/4" to 1/2"

*** When cladding weight > 25% of total dead load**

43

Accumulation of tolerances

Alignment tolerances of non-structural steel elements like curtain walls, masonry supports, railings, etc. are generally more restrictive than structural steel.

Solutions:

1. **Investigate and determine tolerance requirements.**
2. **Provide adequate adjustment.**

44

Miscellaneous topics

45

Threaded stud with weld flash

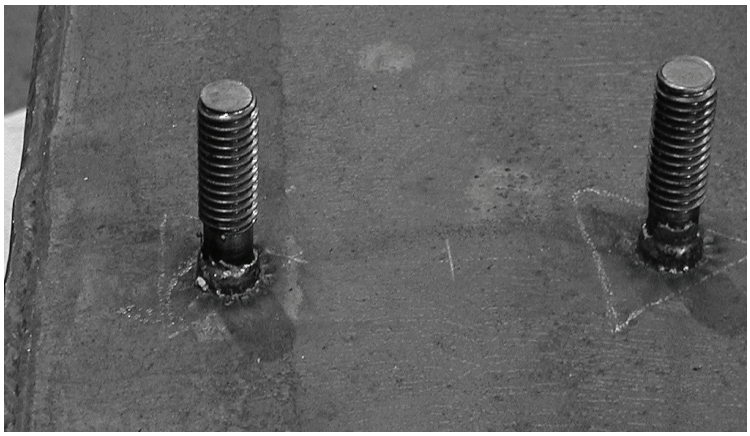

46

Use of Threaded Studs

- Use where bolt access is limited.
- Use where holes can not be made.
- Use where connections have to be laid out in field.
- Use “reduced base stud” for standard holes or provide shims w/3/16" OVS to allow for weld clearance.

47

What to do about banging bolts?

Solutions:

1. Assure owner that banging bolts are not a safety issue.
2. Inspect connections.

Prevention:

1. Use snug tight bolts
2. Use single angles instead of shear tabs.

48

How to resolve a dispute on bolt tension?

Solution:

The "Specification for Structural Joints Using ASTM A325 or A490 Bolts" contains in Section 10 "Arbitration" the procedure to resolve a dispute on bolt tension.

49

How to resolve a dispute on bolt tension?

Prevention:

Use snug tight bolts where ever possible.

Snug tight is defined as all plies in firm contact.

It is permitted to tension bolts in snug tight connections.

50

Are Anchors on Pour Stops a Tripping Hazard?

If the anchors project from the pour stop over the beam they are considered a tripping hazard by OSHA; however, if they do not extend over the beam they are not considered a tripping hazard.

51

Steel deck does not fit properly over bolted moment connections

Solution:

Cut deck away and provide deck support adjacent to the splices.

Prevention:

1. Detail deck support where connections prevent proper deck bearing.
2. Change connection detail to avoid deck interference.

52

Can open holes be left in members?

Yes, except in fatigue cases, where it is recommended that the open holes be filled with fully tensioned bolts.

Net section checks must also be made on tension members and the tension flange of beams.

(see 2005 Specification Section F13)

53

Can mill reports be used to justify a larger load capacity?

In general no, unless some additional tests are conducted on the material in question.

54

Field obtained mechanical and chemical properties

Chemical properties can easily be obtained from beams or columns by drilling shavings from the members, or by utilizing a hole saw.

Tensile coupons can most easily be taken from the flanges of simply supported beams. Samples taken from stressed areas may require repair after specimen removal.

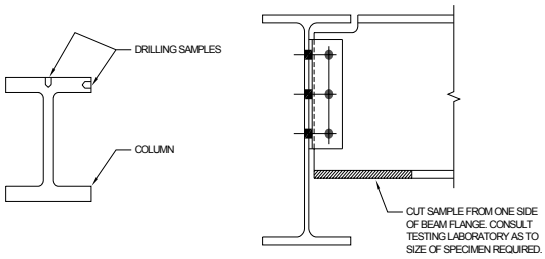

55

Connection Fit-up

56

Problems with fit-up of weak axis moment connections

- Moment connection to column web with misalignment between continuity plate and beam flange. This usually occurs when the continuity plate is the same thickness as the beam flange.

57

Misalignment between continuity plate and beam flange

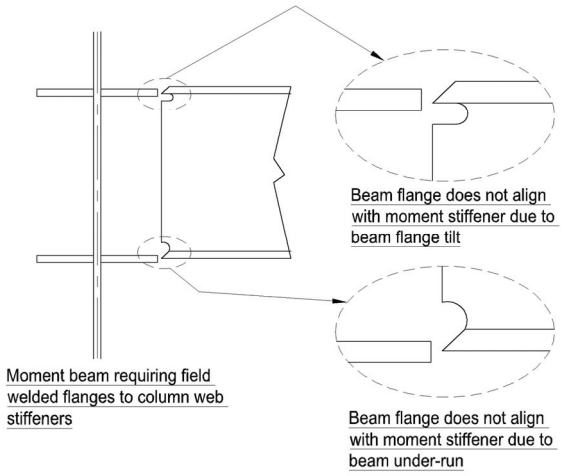

58

Misalignment between continuity plate and beam flange - Prevention

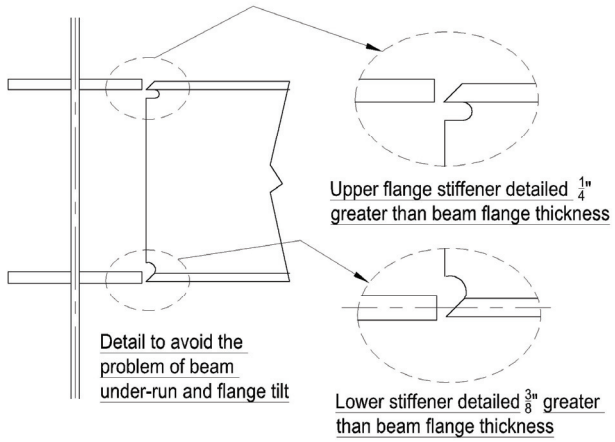

59

Incorrect material grade used for continuity plates

- **Moment connection to column web with incorrect material grade used for continuity plates.**

CJP weld strength governed by strength of base metal

60

Incorrect material grade used for continuity plates

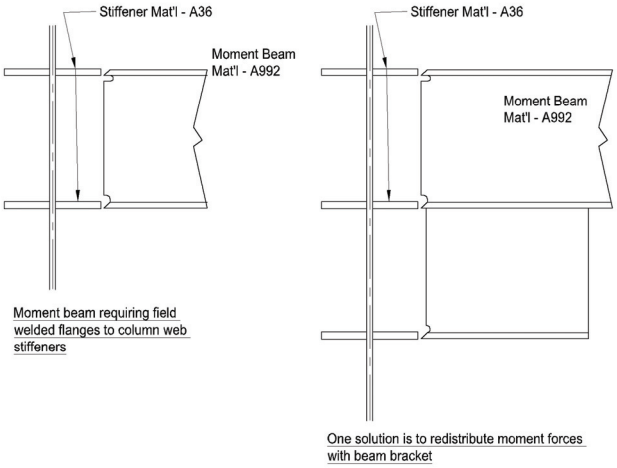

61

Bolted Flange Plate Connections

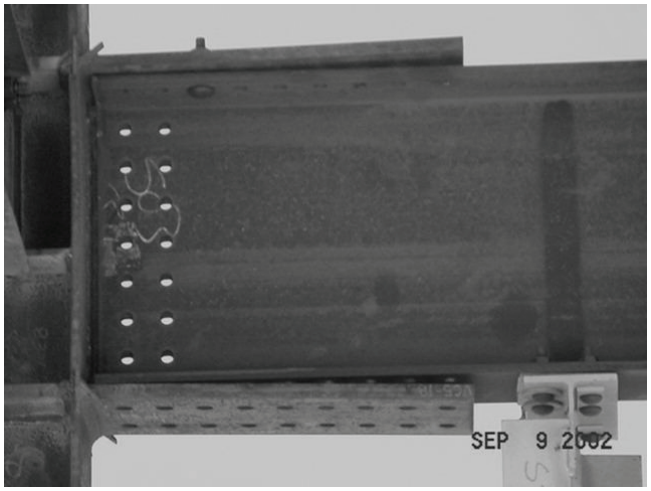

62

Bolted Flange Plate Connections

Solutions:

1. Jack plates against beam by snuging bolts, then tensioning.
2. Use shims
3. If beam does not fit between plates, remove top plate and re-weld.

Prevention:

1. Provide shim space, check A6 tolerances.
2. Modify weld detail and weld sequence to reduce out of plane distortion.
3. Heat straighten as required after welding.

63

Steel to Concrete Connections

Beams too long, or too short, at concrete wall

Solutions:

1. Cut beam and weld connections.
2. Use larger angles and weld to beam.
3. Field measure and replace beam.

Prevention:

1. Recognize concrete tolerance.
2. Provide adjustable connections.

64

ACI tolerances on walls

From the Standard Specifications for Tolerances for Concrete Construction and Materials (ACI 117-90), Section 4 – Cast – in – Place Concrete for Buildings:

4.1 Vertical alignment:

4.1.1 For heights 100 ft. or less: 1 inch

For heights greater than 100 ft. 1/1000 times the height but not more than 6 inches.

4.2 Lateral Alignment

4.2.1 Members: 1 inch

65

Beam to Concrete Connection Welded / Bolted

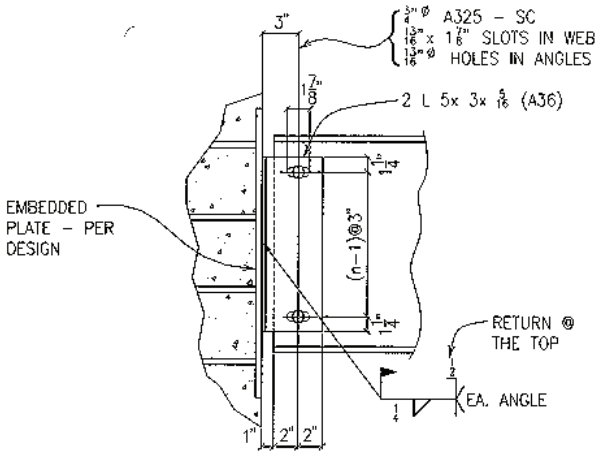

Note: Max adj of ± 5/8 in.

66

Beam to Concrete Connection
Welded / Welded

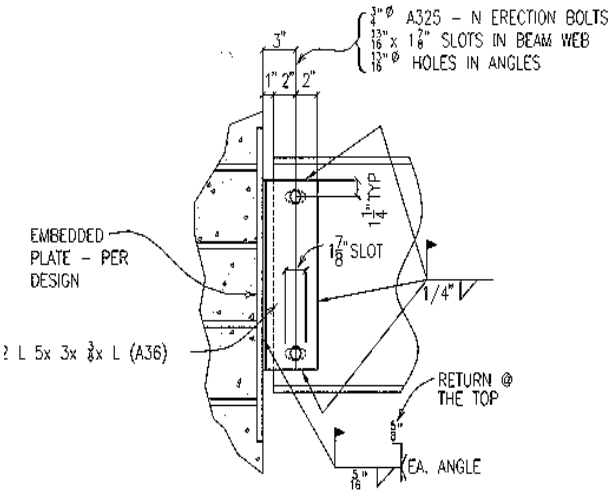

- Note: Bolts are for erection so slot length can increase. Design weld for max eccentricity

67

Single Plate Connection
Fix at concrete wall

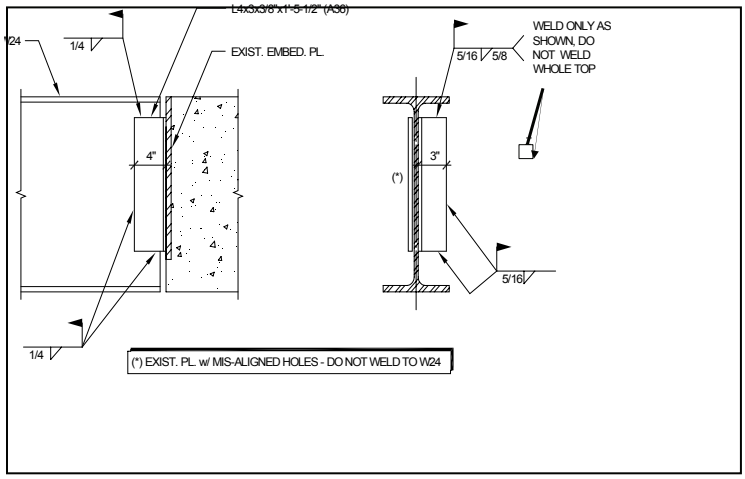

68

Embed plates are too small

Solution:

1. Weld on additional plate.
2. Epoxy bolt additional plate.

Prevention:

Oversize embeds and use standard sizes.

Check stud spacing.

Provide nail holes in embed plates to assist in their installation.

69

Can welding to embeds damage concrete?

Too much heat can cause concrete spalling. However this is seldom a problem.

Prevention:

1. Use fillet welds.
2. Proper weld sequence.
3. Provide thick embed plates. Use ½ in. minimum thickness for deck bearing, and ¾ in. for beam bearing.

70

Interference

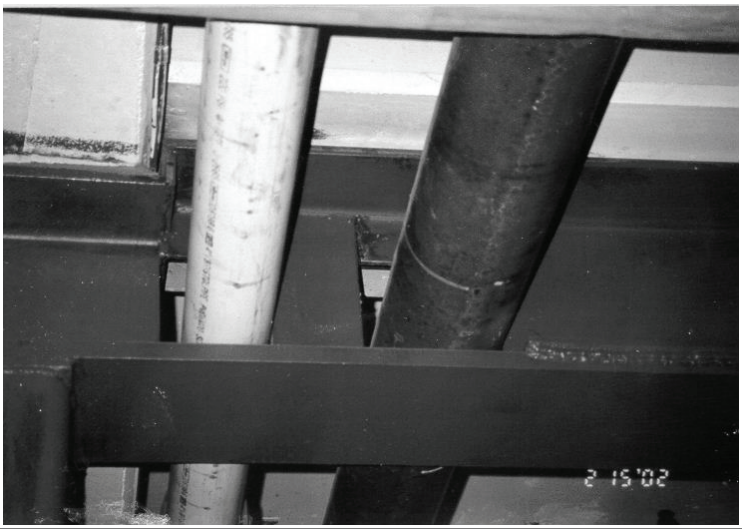

71

Interference Problems

72

Pipe Interference

73

Bracing Interference

74

Bracing Interference

Solution:

1. Move bracing.
2. Cut out interference and reinforce as required.

Prevention:

Proper design and detailing to avoid interference, or provide details for compatibility.

75

Reinforcing Members

1. Review moment and shear diagrams to determine where reinforcement is required.
2. Check field for construction clearances.
3. Select reinforcing elements based on strength and constructability.
4. Size reinforcement and welds based on requirements above.

76

Examples of reinforced members

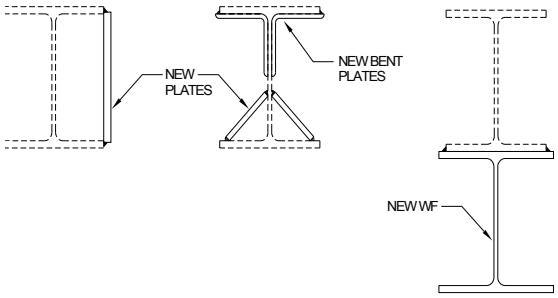

77

Examples of reinforced members

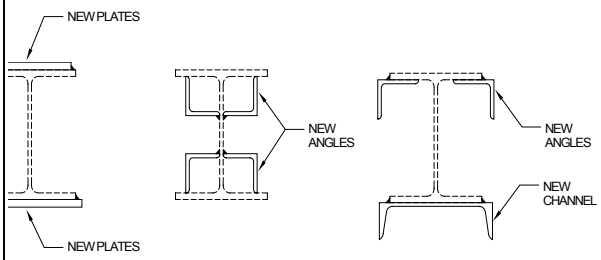

78

Reinforcing Connections

Solutions:

1. Remove and replace the connection with a stronger connection.
2. Use “X” Type Bolts
3. Add weld length or increase weld size.
4. Remove old rivets or A307 bolts and replace with A325 or A490 bolts.
5. Ream holes and use larger diameter bolts.
6. Add web framing angles to a seated connection
7. Add a seat to a web framed connection.

79

Reinforcing Connections

Solutions:

8. Add weld to existing riveted or A307 bolted connections.
9. Add weld to existing high strength bolted connections.
10. Extend the length of framing angles by welding additional length.
11. Add a second angle to a single angle web framed connection.

80

Examples of reinforced connections

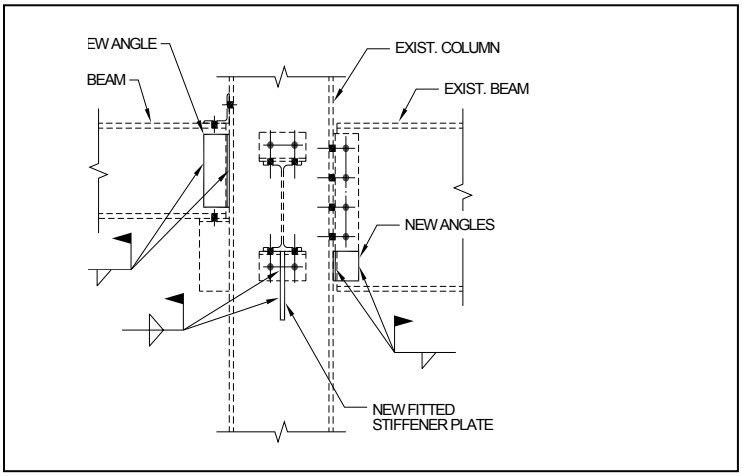

81

Examples of reinforced connections

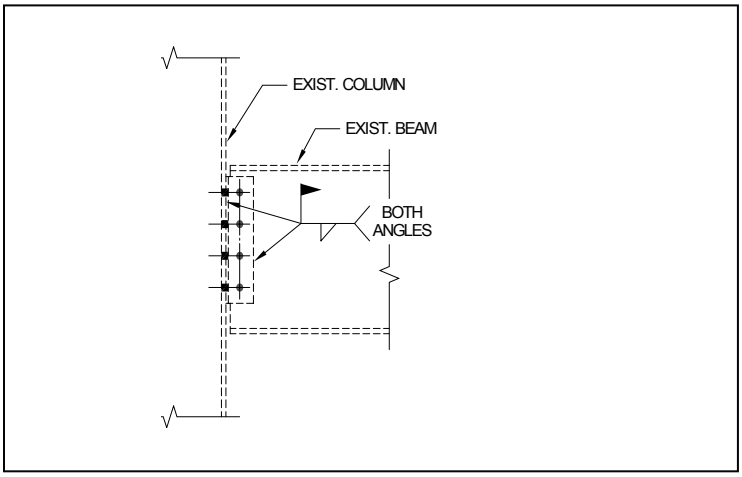

82

Examples of reinforced connections

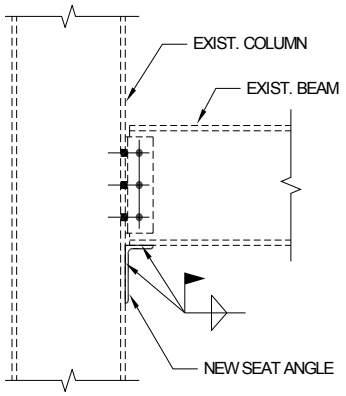

83

Examples of reinforced connections

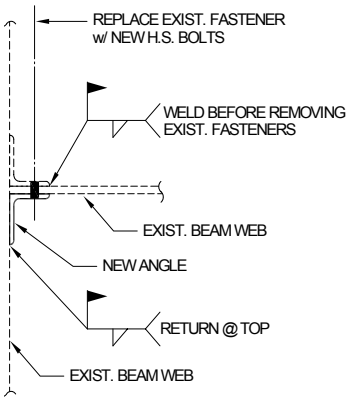

84

Columns

85

Column splices do not line up

Solutions:
1. Gaps ≦1/16" ok, Gaps ＞1/16" Shim
2. Remove splice plates and replace.
3. Field weld if possible.

Prevention:
1. Provide simple splice details.
2. Use standard AISC splice details.

86

AISC recommended column splice

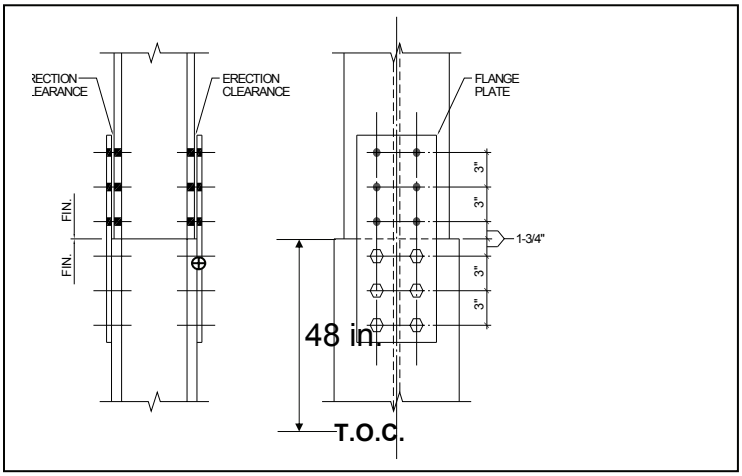

87

Column too short

Solutions:

1. Shim or grout to proper height.
2. Splice the column.
3. Replace the column.
4. Modify beam connections to correct elevation. Weld on seat or relocate holes.

Prevention:

1. Use uniform base plate elevations where possible and clearly note exceptions.
2. Clearly show elevation at tops of all columns
3. Require shop Q.C. to verify dimensions.

88

Column erected 1 inch low

89

Connection raised and field welded

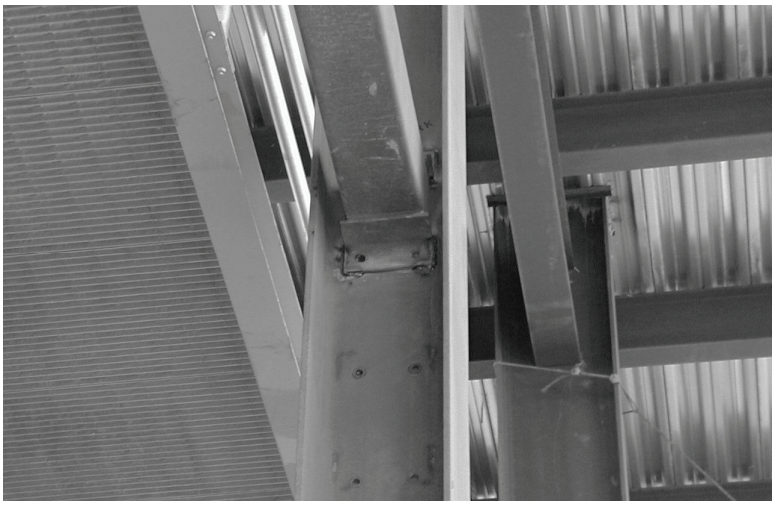

90

Problem: Why were six columns set 1 inch to low?

- This was a detail error caused by a design drawing note that changed base plate grout thickness on one detail.
- Base plates should where possible should be at the same elevation, exceptions should be clearly flagged on the foundation plan.

91

Column too long

Solutions:

1. Use less grout.
2. Modify beam connections to correct elevation.
3. Replace the column.
4. Remove a section of the column.

Prevention:

Same as for column too long.

92

Column not plumb per AISC "Code of Standard Practice" tolerances

Find out why it is out of plumb.

Solutions:

1. Remove or adjust beam connections.
2. Cut anchor rods, move column and replace anchor rods with epoxy rods.
3. Leave as is and brace the column.

Prevention:

Erector should check anchor rods and plumb in a timely manner.

93

After erection, beam line is too short (welded connections)

Weld shrinkage can cause shortening of approximately 1/8-inch in CJP welds

Solution:

Cut loose several connections and correct by weld build out per AWS D1.1 requirements.

Prevention:

Provide adjustable erection connections and plan welding to compensate for shrinkage effects.

94

After erection, beam line is too short or too long (end plate connections)

Solution:

1. Too long - Remove beam and re-fabricate.
2. Too short - Provide finger shims as req'd.

Prevention:

Detail end plates short, approximately 1/8-in. each end, to allow for ASTM A6 and fabrication tolerances.

95

Camber

96

Members to camber

- Non-composite Beams
- Composite floor beams
- Trusses
  - Continuous WT chords
  - Segmented W shape chords
- Crane Girders > 75 ft. (*AISE*)

97

Members not to camber

- Beams with moment connections.
- Spandrel beams supporting facia.
- Beams with torsion loading.
- Continuous beams with cantilevers.
- Beams with bracing connections.
- Crane girders less than 75 ft.

98

Members not to camber

- Beams with significant non-symmetrical loading.
- Beams less than 25' in length.
- Beams with webs ¼ " or less.
- Beams which require less than 1" of camber.

99

When to camber

Camber is usually performed by the fabricator after the beam has been cut to length and after it is punched or drilled.

Beams which require square and parallel ends, such as for end plate or welded moment connections, must be cut after cambering.

100

Too much camber

Solutions:

1. Pour less concrete. (Check fire rating)
2. Replace the beam.
3. Remove camber (easy in the shop).

Prevention:

1. Specify camber properly, camber for concrete dead load only.
2. Do not use camber unless absolutely necessary.
3. Design beams with extra capacity to accommodate special conditions.
4. Spot check in the shop.

101

Camber Cautions

- Don't over-camber beams with shear studs. Depending on the method of concrete placement over-cambering may result in the heads of the studs protruding above the top of the concrete slab.
- Be careful of camber differences between beams and joists.
- Be careful of cambered beams or joists adjacent to non-cambered supports such as moment frames and end walls.

102

Camber Tolerances for Beams

From the AISC Code of Standard Practice Section 6.4:

- **The camber tolerance is minus zero / plus ½-in with an additional 1/8-in. per each additional 10 ft. of length (or fraction thereof) for lengths in excess of 50 ft.**
- **These tolerances are workmanship guidelines and should not be considered absolute.**
- **The AISC Code of Standard Practice indicates that camber is measured in the un-stressed position in the shop.**

103

Steel deck does not bear on supports

The contractor cannot make deck bear on adjacent supports. This condition happens when:

- **Fill-in beams or trusses with large camber are adjacent to beams or trusses with much less camber.**
- **Beams, trusses, or joists with large cambers are adjacent to deck bearing angles on concrete of masonry walls.**

104

Steel deck does not bear on supports

Solution:

- A practical solution, is to saw cut the deck at the supports(s) adjacent to the support that is not bearing. The deck will then become simple span rather than continuous, which is ok provided it has the strength and deflection properties to meet the project requirements.

Prevention:

- Design for these conditions. Transition changes in camber or provide for deck splice.

105

What to do about extra concrete due to beam deflection during concreting ?

Solution:

1. Re-evaluate the beam strength to determine if it can support the additional weight.
2. Reinforce the members.

Prevention:

1. Provide notes on drawings about the need for extra concrete.
2. Provide camber.
3. Use stiffer beams.
4. Design beams for extra concrete

106

Floor is not level

Solution:

1. Use latex leveling compound.
2. Grind off high concrete.

Prevention:

1. Camber the floor beams to compensate for the anticipated concrete placement deflections.
2. Increase the concrete volume by varying the slab thickness to compensate for placement deflections.
3. Use larger beams.
4. Use laser screed.

107

Shear Studs

108

Shear studs break off during inspection

Solutions:

1. Inspect and replace.
2. Fillet weld studs (only if a few are req'd).

Prevention:

1. Install studs properly.
2. See AWS Section 7.6 for Qualification Requirements.

109

Trouble Shooting Stud Installation Problems

- Surfaces are clean and dry
- Proper arc shield (ferrule) for job
- Adequate power source
- Welding gun is setup properly
- Gun held in position until solid
- Full 360º weld flash

110

Fillet welds on studs

- **AWS 7.5.5.3 Stud Fit (Fillet Welds)**

  "For fillet welds, the stud base shall be prepared so that the base of the stud fits against the base metal"

- **AWS 7.5.5.4 Fillet Weld Minimum Size**

  "When fillet welds are used, the minimum size shall be the larger of those required in Table 5.8 or Table 7.2"

111

Concrete studs are too high

Solutions:

1. Remove studs and replace.
2. Use additional concrete thickness.
3. Reduce beam camber by heat straightening.

Prevention:

- Specify camber properly
- Select stud length at mid range

112

Fabrication and Erection

113

Does incidental corrosion on steel need to be removed?

1. Yes, if paint will be applied.
2. No, if fireproofing is to be applied.

114

Paint Problems

- **Determine the cause.**
  1. Mill scale lifting
  2. Paint lifting
  3. Runs and sags
  4. Mud cracks
  5. Pin holes
  6. Chipping

115

Paint Problems

- **Solutions**
  1. Mill scale lifting: Specify proper surface preparation
  2. Paint lifting: Solvent clean
  3. Runs and sags: Reduce coating thickness or use high solids
  4. Mud cracks: Reduce coating thickness especially in overlap areas
  5. Pin holes: Prime coat must cure before top coating
  6. Chipping: Prime coat must cure before top coating

116

Bolt's don't fit in holes – Shear Connections

AISC Specification prior to 2005

- **When bearing bolts are used, weld cannot share load. The field weld must be designed to transfer the total load.**
- **When slip-critical bolts are used, the bolts and weld may share the load. The field weld can be designed to transfer only the portions of the load not transferred by the bolts. (Pre-tension the bolts before making the field welds).**

117

Bolt's don't fit in holes – Shear Connections

2005 AISC Specification

Bolts shall not be considered as sharing the load with welds except that in shear connections with any grade of bolt permitted by Section A3.3 installed in standard holes or short slots transverse are permitted to share the load with longitudinally loaded fillet welds.

The available strength of the bolts in such connections shall not be taken as greater than 50% of the available strength of bearing type bolts in the connection.

118

Bolt's don't fit in holes – Shear Connections

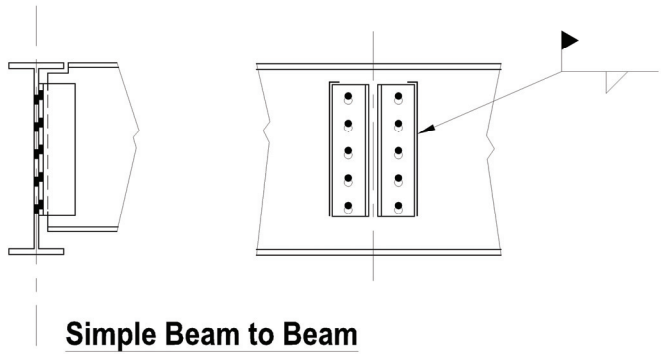

Simple Beam to Beam Connection Holes are Misaligned

119

Bolt's don't fit in holes – Shear Connections

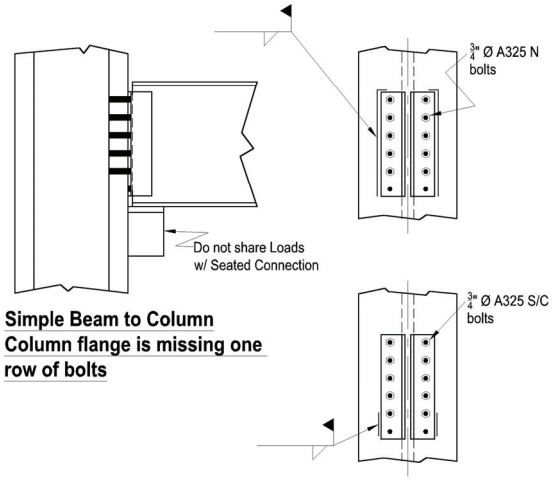

Simple Beam to Column Column flange is missing one row of bolts

- Design both connections as bearing bolts at ½ capacity plus required weld

120

Bolt's don't fit in holes – Shear Connections

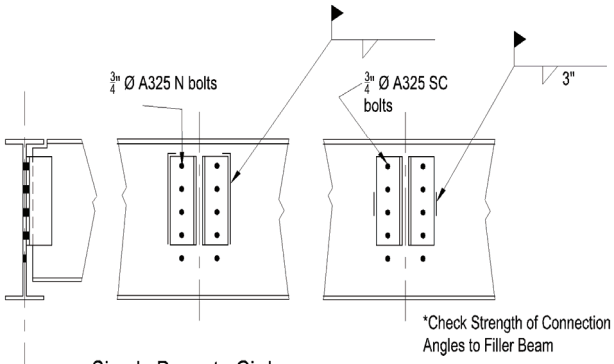

Simple Beam to Girder
Beam End Connection is missing one row of bolts

- Design both connections as bearing bolts at ½ capacity plus required weld

121

Bolt's don't fit in holes

122

Gusset plate holes in wrong location

123

Bolt's don't fit in holes – Bracing Connections

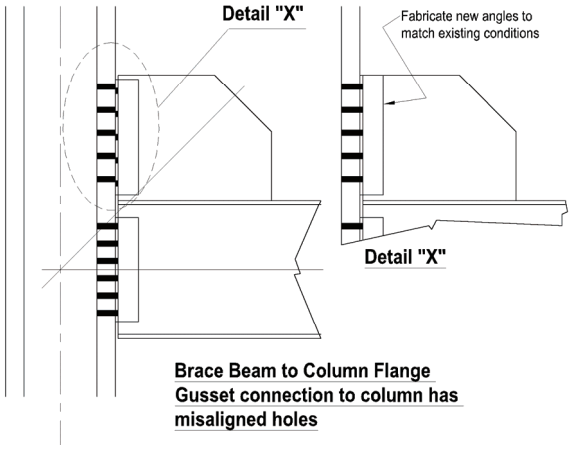

124

Bolt's don't fit in holes – Bracing Connections

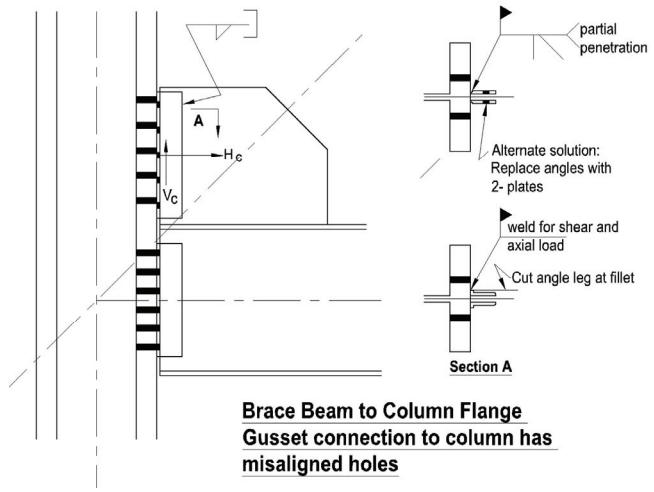

Brace Beam to Column Flange
Gusset connection to column has misaligned holes

125

Bolts don't fit in holes

Solutions:

1. Ream holes.
2. Field weld.
3. Fill and drill.
4. Replace the connection material.

Prevention:

1. Proper detailing and fabrication.
2. Design using SC bolts, and oversize holes.

126

How much is too much reaming?

1. Maximum size depends on original hole size.
2. 1/8" larger than hole size is usually permitted.
3. Check if the edge distances are permissible after reaming.

127

Bolt holes have insufficient edge distance

Solutions:

1. Perform an analysis to see if the insufficient edge distance is detrimental to the safety of the joint.
2. Add material to increase the edge distance.

Prevention:

1. Do not design connections with minimum edge distances too tight. To keep out of trouble always add an extra 1/8 inch to edge distances.

128

Columns or bents tied together with precast concrete or timber

The structural engineer designs a building where the columns or bents must be stabilized with materials other than structural steel. This forces the erector to temporarily support all bents and columns until the non-structural steel items are installed. This is expensive.

It is usually less expensive to use structural steel to frame bents to one another.

129

Mixed bolts

Problem: Wrong size or type of bolts in holes.

Avoid using different grades of bolts in the same diameter.

Design your structures using only one or two sizes of bolts.

130

Erection Aids

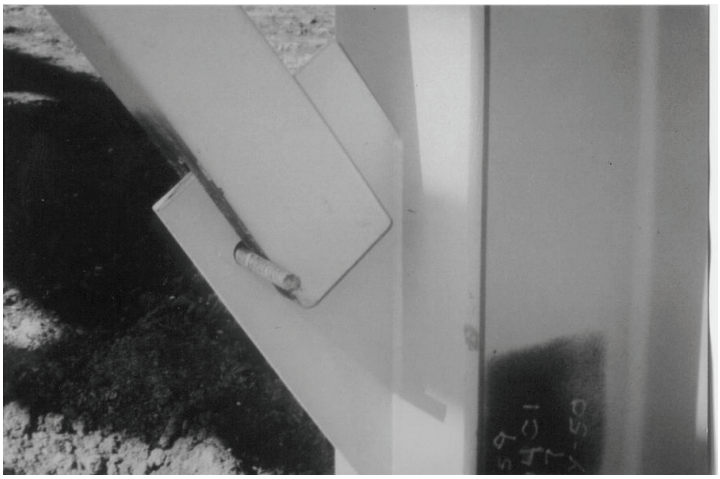

131

Who is responsible to design and to provide erection aids for splices and connections?

The erector is responsible.

Solution:

Erector – fabricator to coordinate.

Prevention:

Think about erectability during design.

132

Welding Considerations

133

How do I know if steel is weldable?

Use carbon equivalent formula:

CE = C+Mn/6+Cr/5+Mo/5+V/5+Ni/15+Cu/15+Si/6

If CE < 0.48 ok

Where:

C = Carbon content %

Mn = Manganese content %

Cr = Chromium content %

Mo = Molybdenum content %

V = Vanadium content %

Ni = Nickel content %

Cu = Copper content %

Si = Silicon content % Reference

134

How do I know if steel is weldable?

Maybe able to weld with preheat:

Carbon Equivalent	Suggested preheat
0 to 0.45%	AWS D1.1 Table 3.2
0.45 to 0.60%	200 – 400 F*
Over 0.60%	400 – 700 F*

***See AWS D1.1 Annex I**

135

How do I know if steel is weldable?

- **Mill Certifications.**
- **Cut or drill samples for laboratory analysis.**
- **Weld a lug on in the field and beat it with a hammer.**

136

Welding Visual Inspection AWS D1.1 Table 6.1

- Crack Prohibition
- Weld/Base Metal Fusion
- Crater Cross Section (except ends of intermittent fillet welds)
- Weld Profiles per Figure 5.24
- Weld Size
- Under Cut
- Porosity

137

Prevention of Welding Problems

- Welder Certification
- Weld Procedure Specifications
- Fabrication / Erection Inspection
- Verification Inspection

138

Welder Certification Requirements

- Process
- Joint Type
- Material Thickness
- Position
- Special Conditions
- Duration

139

Weld Procedure Specifications (WPS)

- Prequalified or Qualified
- Material
- Joint
- Process
- Filler Metal
- Operating Parameters

140

Fabrication / Erection Inspection

- Size, length, & location of welds
- WPS
- Electrode Usage
- Joint prep, assembly and performance
- Meets Visual Req'd. in Table 6.1

141

Verification Inspection

- Owner or owners engineer determines the extent of inspection.
- NDT other than visual must be specified on the contract documents.
- Inspection performed in timely manner.

142

Weld Cracks

- Determine the extent of the crack
- Try to determine reason for crack
- Remove crack completely
- Repair procedure
- Inspection to verify repair

143

Determine extent of crack

- Inspect visually and utilize DP and/or MT as required to verify.
- Use UT where possible to evaluate the depth of the crack.

144

Reason for crack

- Joint restraint
- Lack of preheat
- Weld procedure
- Moisture contamination
- Material
- Unanticipated load or service condition

145

Remove crack completely

- The crack and sound metal shall be removed beyond the end of the crack.
- Prep for repair weld.
- Verify by PT or MT that the crack has been completely removed.

146

Repair Procedure

- The excavation should be cleaned and shaped to receive weld.
- A repair procedure should cover preheat and weld pass requirements.

147

Inspection to verify repair

- Clean and Grind Surface
- Visually inspect weld
- Wait 24 to 48 hrs before NDT

148

Evaluation of welds

- **AWS D1.1 Section 6.8 Engineer's Approval for Alternate Acceptance Criteria**
  - Suitability for service
  - Based on experience
  - Experimental evidence
  - Engineering analysis
  - Service load

149

Roof top units (RTU'S)

150

Vibration of RTU's

Solutions:

1. Modify stiffness of supporting steel.

   Supporting beams or joists should have a natural frequency 50% > or < 50% of the operating frequency of the unit.
2. Provide isolators.

Prevention:

1. Design support steel properly.
2. Provide isolators.

151

Supporting member frequency

Concentrated Load @ Midspan: $f = 188/\Delta^{0.5}$

Uniform Load: $f = 213/\Delta^{0.5}$

f = Natural frequency of the supporting member, (cycles/minute).

Δ = Supporting member deflection at midspan.

152

Roof top unit in the wrong location.

Solution:

1. Move the unit to the proper location.
2. Reinforce supporting members.
   - If steel beams:
     - Use cover plates etc.
     - Add new beam or beams.
   - If joists:
     - Add beam or beams.
     - Add joists.
     - Reinforce joists.

153

Joist Reinforcement

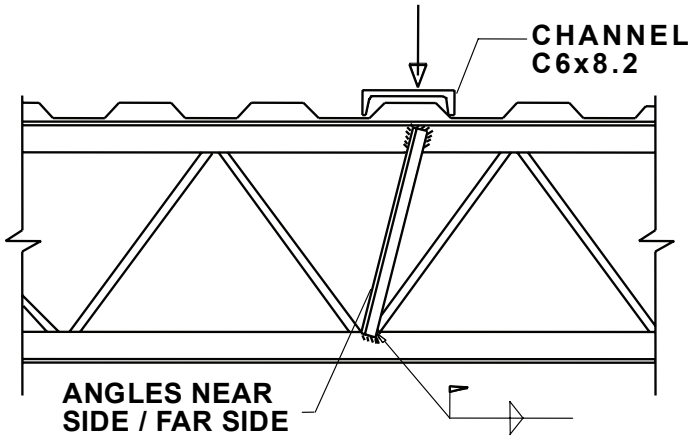

Reinforcing Beam

155

Beam Seat

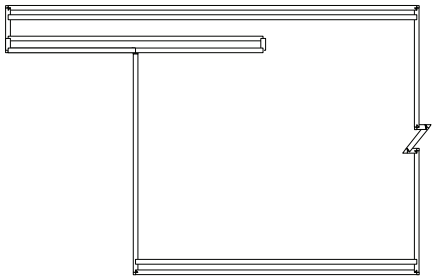

Roof top unit in the wrong location.

Prevention:

- Design flexible headers.
- Use KCS- Series joists.
- Use zoning.
- Provide extra joists.

157

Double Frame

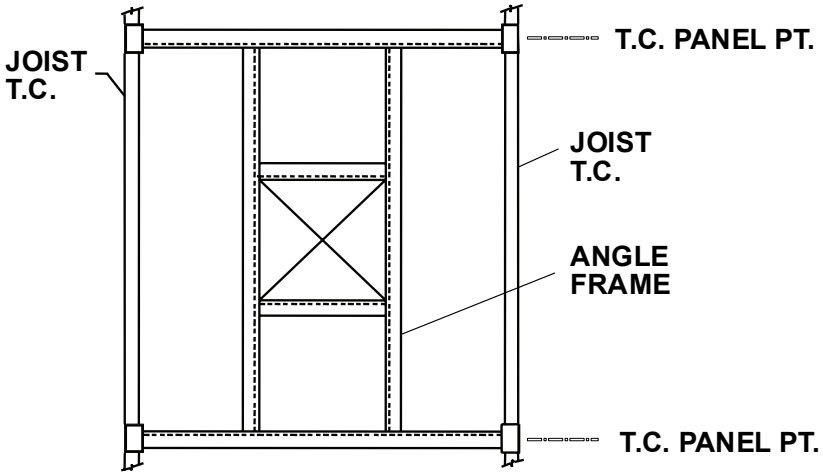

Double Frame

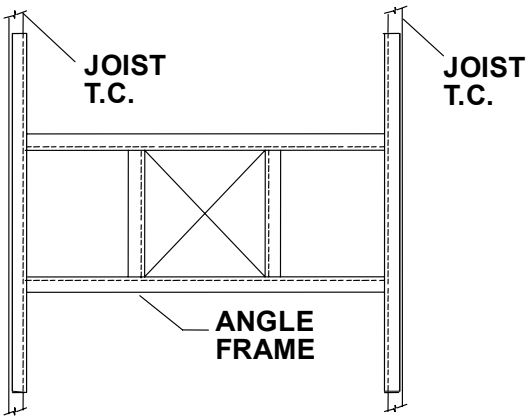

KCS- Series Joist

- Constant Moment Capacity
- Constant Shear Capacity

  Diagonals designed for stress reversal, except end diagonal which is 100% tension only

Concentrated Loads must be Specified

160

Roof Top Zone

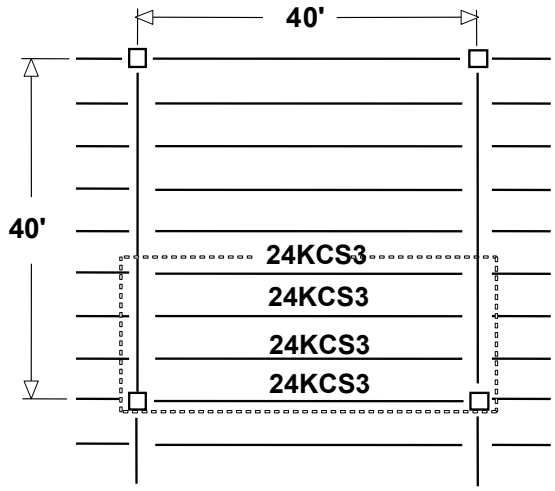

161

Roof Top Units (RTU's)

- Do Not Have Uniform Density
- Weight of Curb and Support Frame

162

Open web steel joists

163

Joist Reinforcement

164

Joist Reinforcement

165

Joist Reinforcement

166

Adding joists or reinforcing joists

Solution:

1. Add joist if time permits.
2. May get beam faster.
3. Seek assistance from the joist manufacturer.

Prevention:

1. Use KCS- Series joists.
2. Over design for mechanical equipment and collateral loads.
3. Spread sprinkler main loads between two joists Put proper notes and details on plans.

167

Reinforcing of steel joists:

Methods of Reinforcement:

- Load Distribution
- Adding New Joists
- Reinforcing Existing Joists

168

Load distribution to Joists

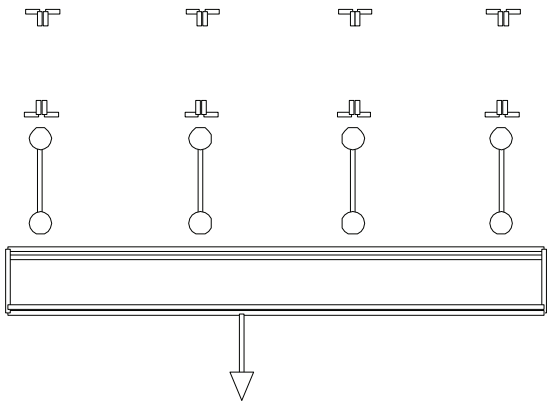

169

Adding new joists or beams:

- Existing Interference
- Camber
- End Seats
- Lateral Support

170

Field installed End Seat

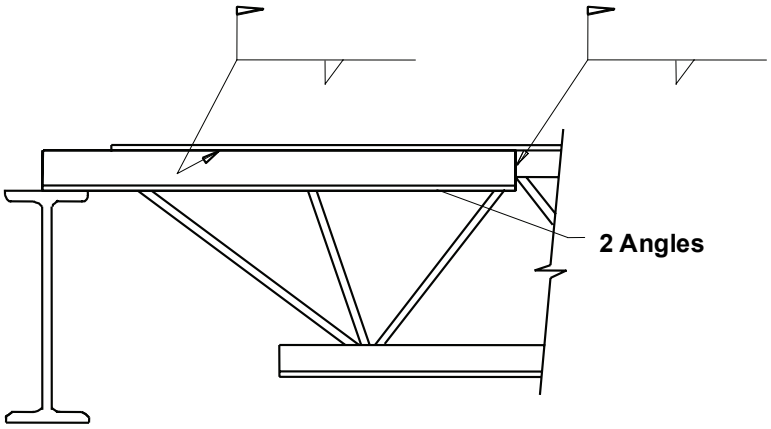

Check:

- Type of Web Members (Rod or Crimped)
- Chord Types (L's, Cold Formed, Rods)
- Bridging Locations
- Interference's
- Condition of Joists

172

Reinforcing Joists:

- Chords, Webs, Seats, and Welds
- Force Reversals

173

Determining Existing Joist Capacity:

- SJI Load Tables:
  - Chords
  - Web Members (Percentage of End Reaction)
- Material Properties
- 75 Year Digest (1928-2003)
- Joist Tags
- Measurements of:
  - Chords
  - End Diagonals

174

Existing Joist Capacity:

- **Moment Capacity:**
  - From Load Tables
  - Calculations Based on Chord Measurements
- **Shear Capacity:**
  - From Load Tables (% of Reaction)
  - Calculations Based on Web Measurements
- **Weld Strength:**

175

Joist Reinforcing Methods:

- Design the web reinforcing for the total shear load.
- Proportion the shear between existing web members and the reinforcing.
- Chord reinforcing can be proportioned between the existing chord members and the reinforcing.
- What about shoring?

176

Joist Reinforcement - Top Chord

177

Chord Interference

178

Top Chord Reinforcement

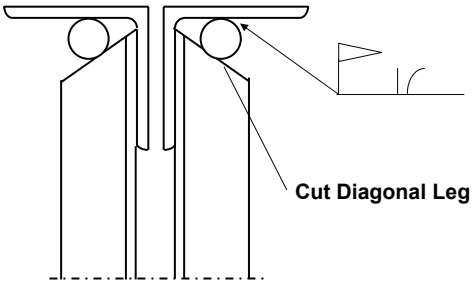

179

Alternate Top Chord Reinforcement - Outside Diagonals

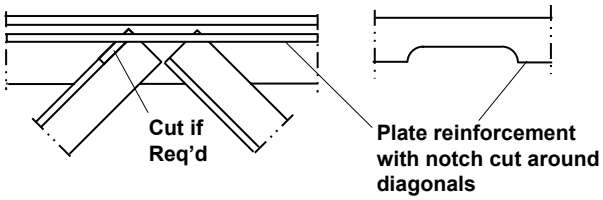

180

Bottom Chord Reinforcement

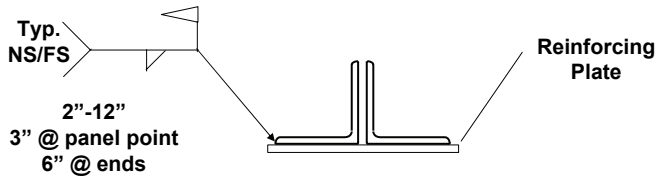

181

Angle Reinforcement

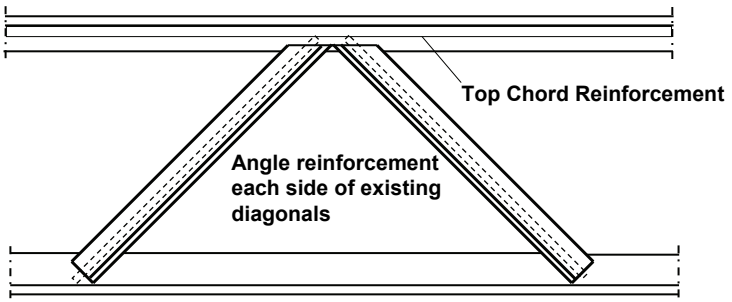

182

Crimped Web Members

183

Joint Reinforcement

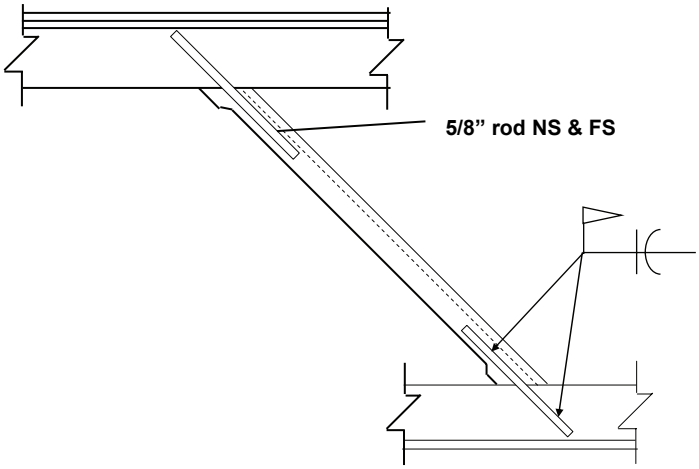

184

Joint and Web Reinforcement

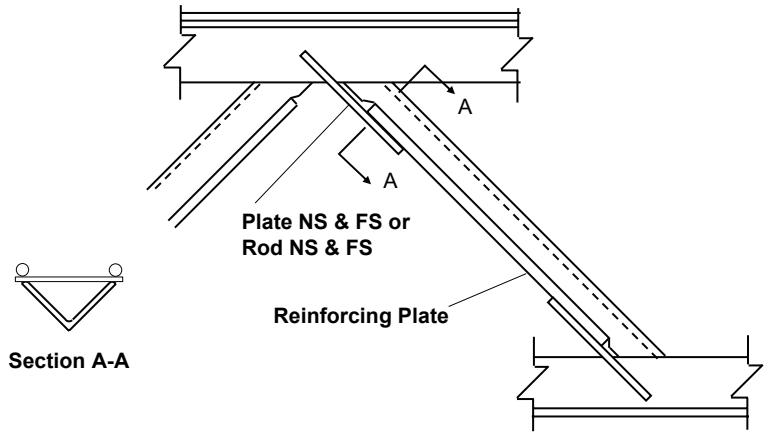

185

Outside Web Members

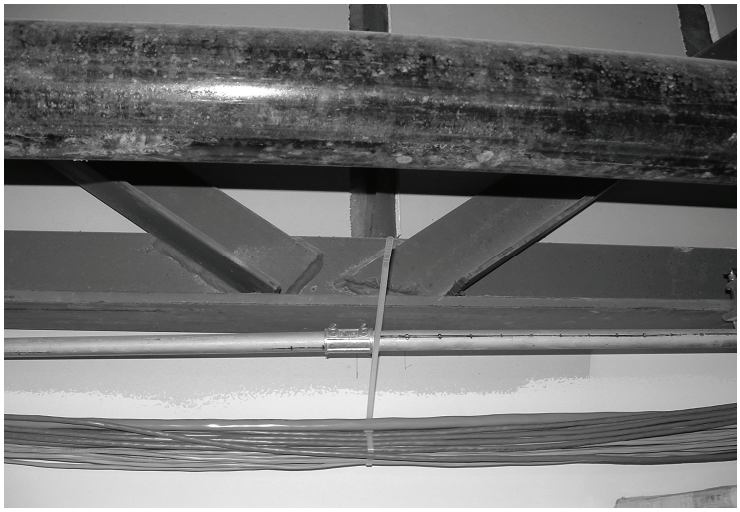

186

Web Reinforcement

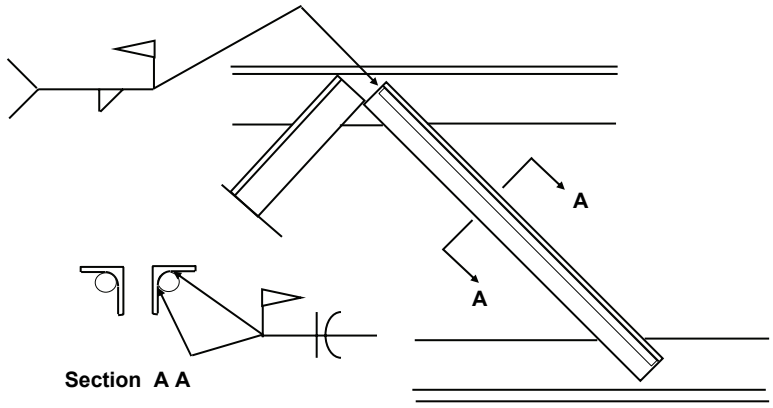

187

Added Gusset

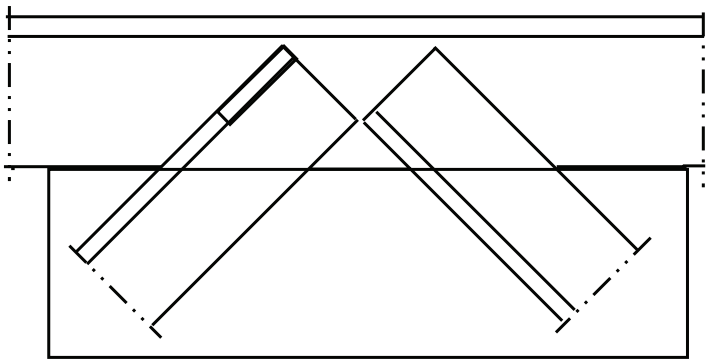

188

End Diagonal Reinforcement

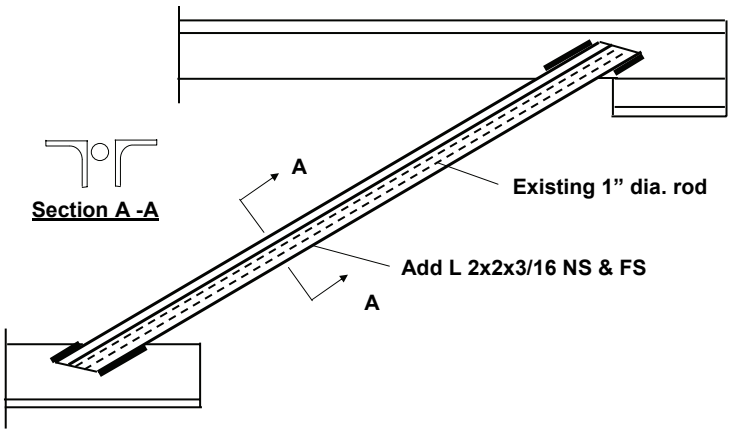

189

Joists are too long

Solutions:

1. Move support member
2. Get new joists
3. Use a beam
4. Cut and replace a section at center of joist.
5. Redesign joist seat

190

Joists are too short

191

Joists are too short

Solutions:

1. Get new joist if time permits.
2. Use a beam.
3. Extend beam flange.
4. Modify joist end or splice joist at center of joist.
5. Move the supporting member, if possible.

192

Joists (blue) bearing on the W16 x 31 (red) will not have correct bearing

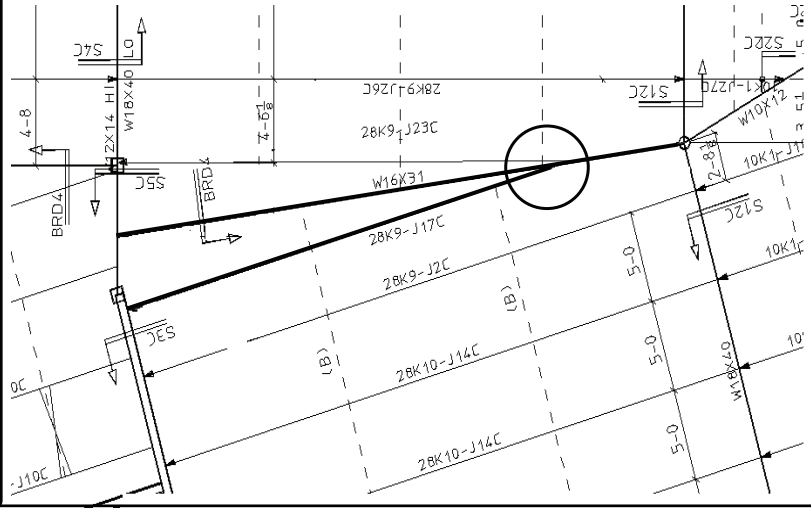

93

Keep angle between joist and beam > 30°

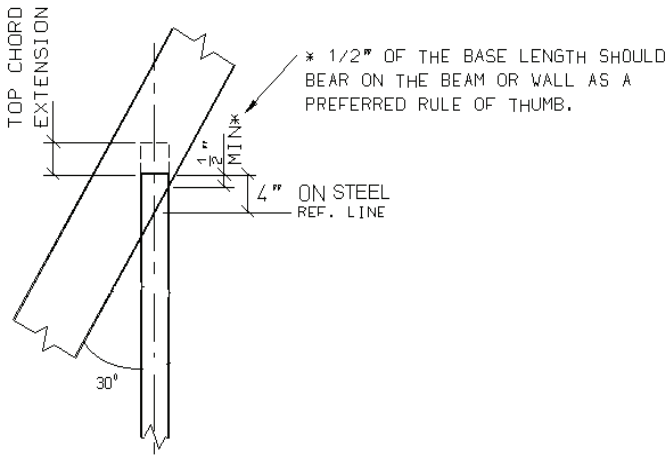

94

Move joists off of skewed beam

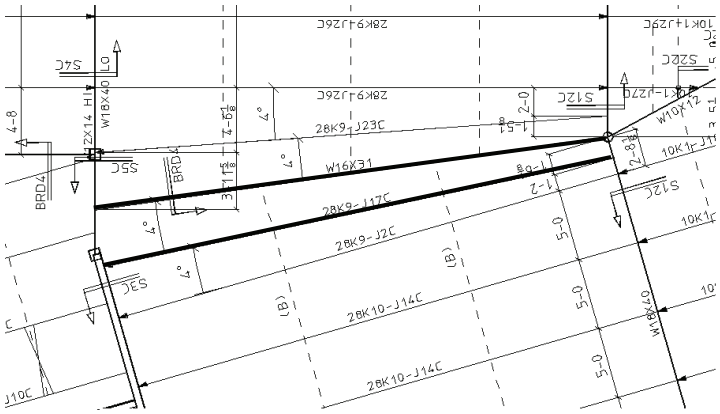

195

Joist bridging interference

Solutions:

1. Cut and replace with x-bridging on either side of interference.
2. If interference is continuous reinforce joists as required.

Prevention:

Coordinate trade requirements.

196

X – Bridging at Walls

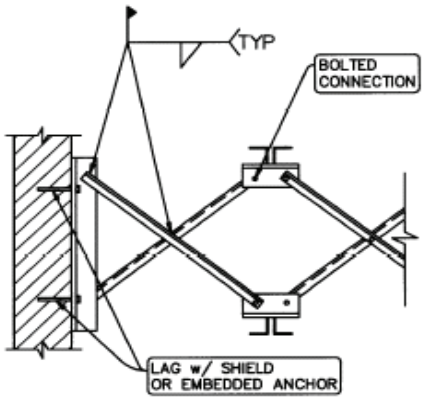

BOLTED DIAGONAL BRIDGING TERMINUS AT WALL

197

Folding Partitions

Be aware of deflections and shear related problems with folding partitions.

Solution:

Properly specify load conditions and deflection requirements.

A one inch live load deflection is normally acceptable.

198

Seat Depth Changes

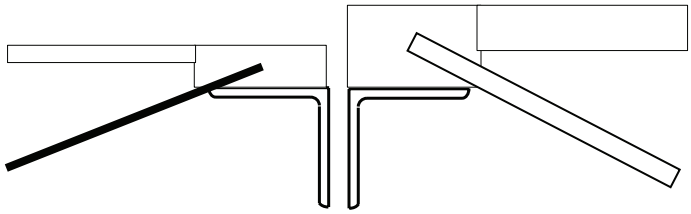

199

Unequal Joist Reactions

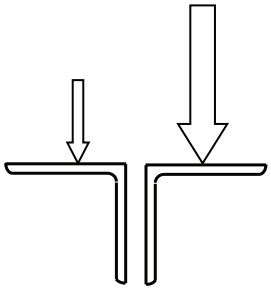

Recognize torsional problems associated with joist reactions on the same beam or joist girder

200

Crane Buildings

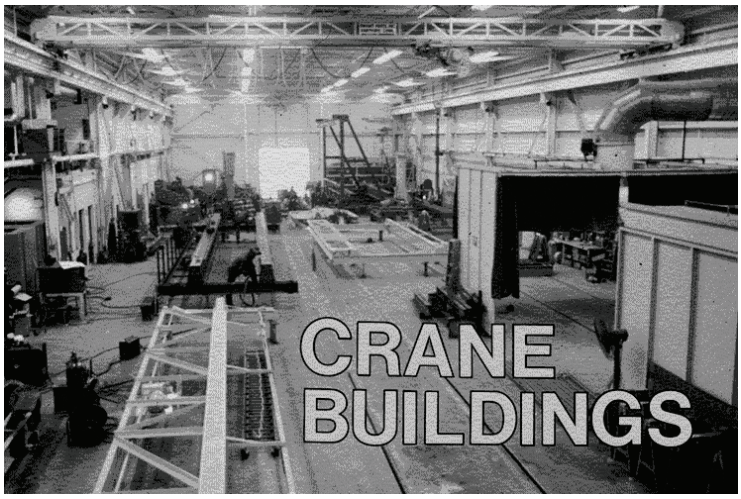

201

AISC Design Guide 7

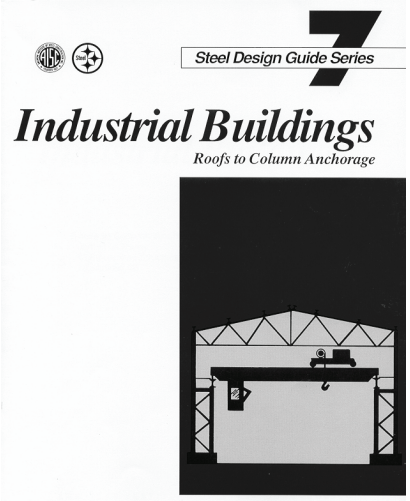

202

Bolted Rail Joints

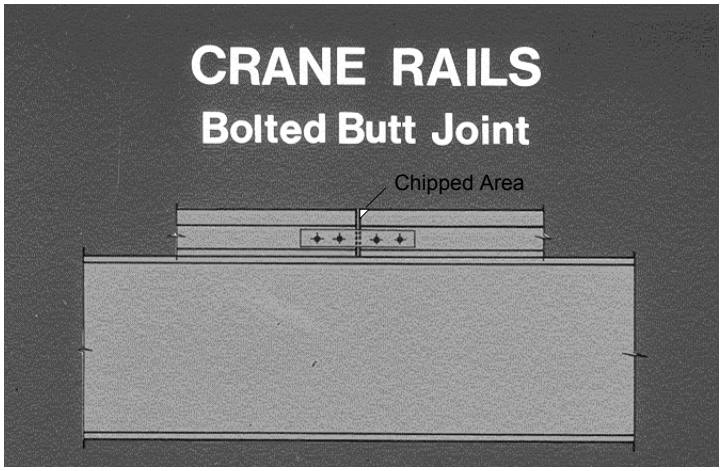

203

Rails chip off at joints

Bad joints cause wheel bearings to wear out quickly, and increase impact forces on the runway.

Solution:

Replace Rails.

Prevention:

Maintain tightness of joints.

Specify milled tight fit joints.

Use A325 bolts in rail joints.

Use welded rail joints.

204

Welded Butt Joints

- Consult rail manufacturer for welding requirements and details.
- Once welded these joints are usually maintenance free.
- Impact stresses eliminated with welded joints.

205

Diaphragm plate failure

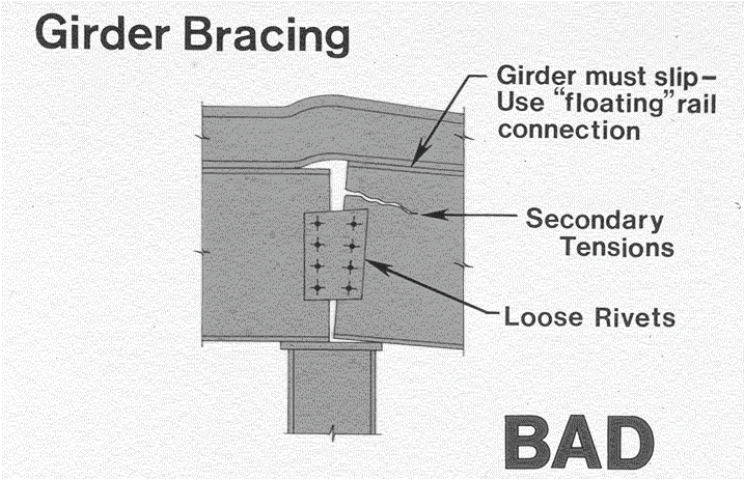

206

Diaphragm plate failure

- **Solution**
  - **Remove diaphragm plates and provide a proper tie back to the column.**
- **Prevention**
  - **Do not use diaphragm plates.**

207

Tie Back Failure

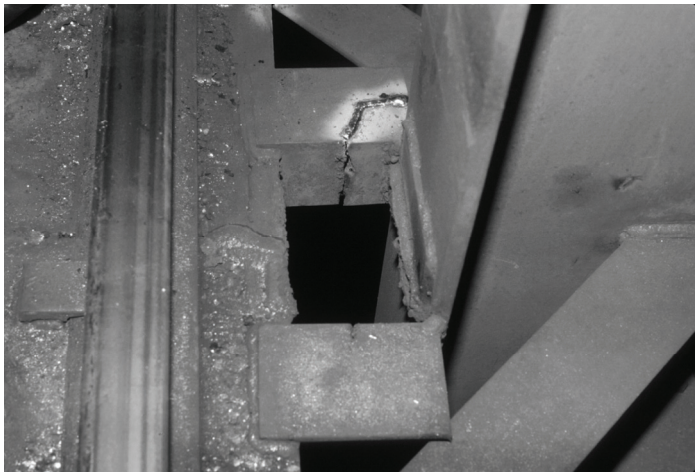

208

Tie Back Failure

Solution:

- Remove and replace with proper tie back.

Prevention:

- Design or specify a proper tie back.

209

Tie Back Design

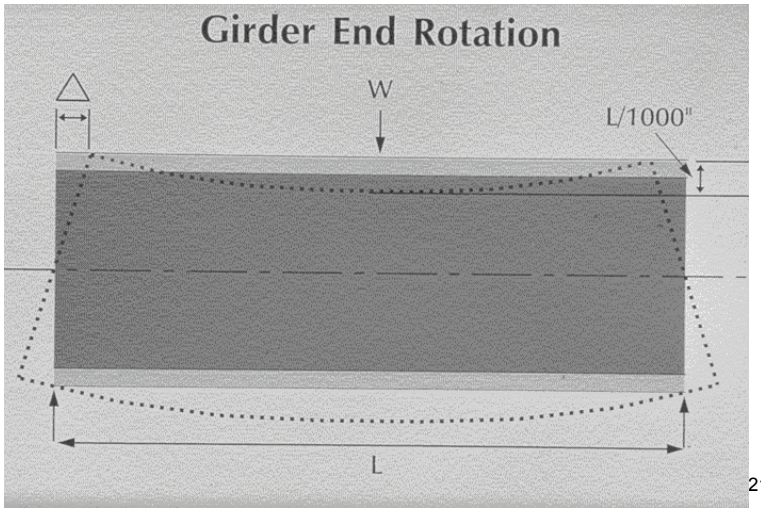

210

Tie Back Design

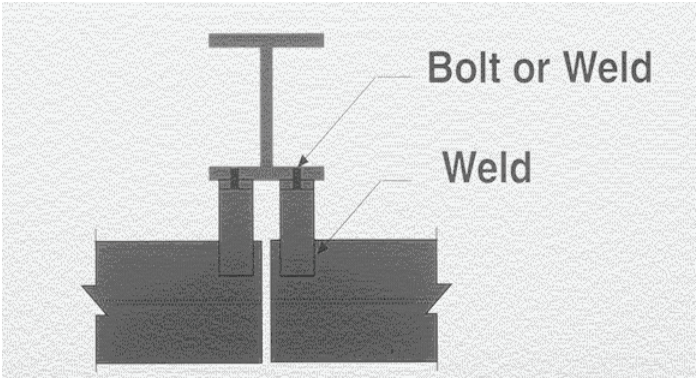

211

Tie Backs

Solution:

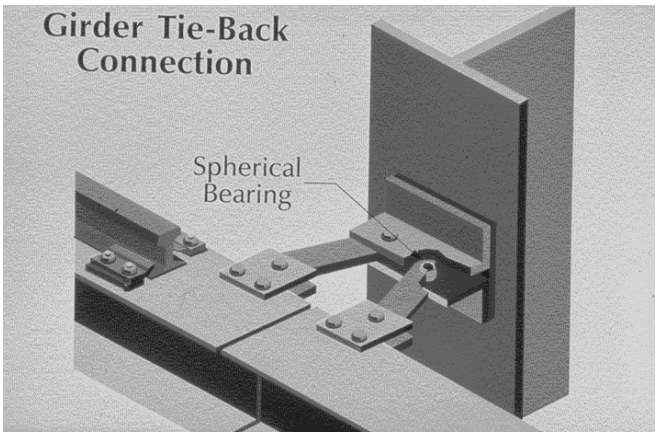

212

Vertical deflection under crane loads

Wheel Loads - No Impact

L / 600 - Light and Medium Cranes

L / 1000 - Mill Cranes

213

Flange to Web Runway Cracks

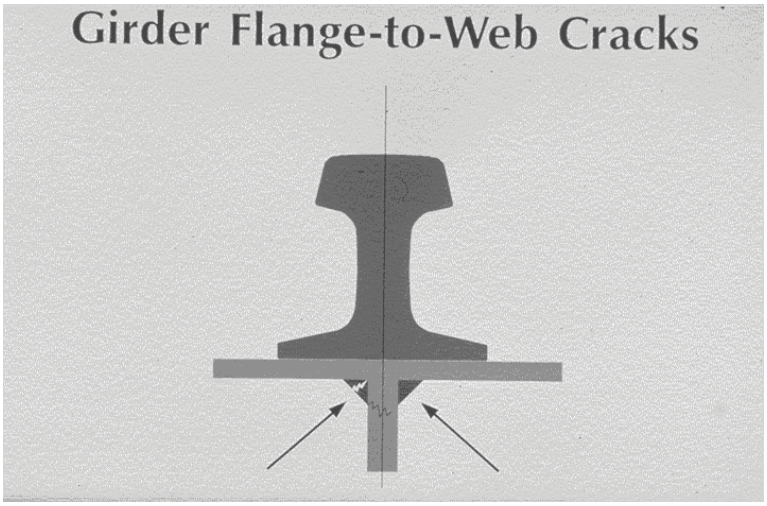

214

Cause of Flange to Web Cracks

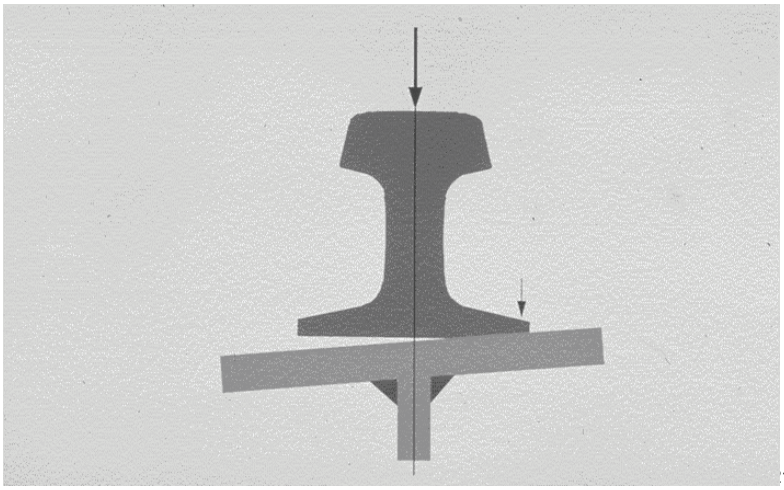

15

Flange to Web Runway Cracks

Solution:

- Air arc cracks and replace weld and add additional fillet reinforcing.
- Replace girders.

Prevention

- Use AISE recommended detail.
- Center rail over web.

216

AISE Flange to Web Detail

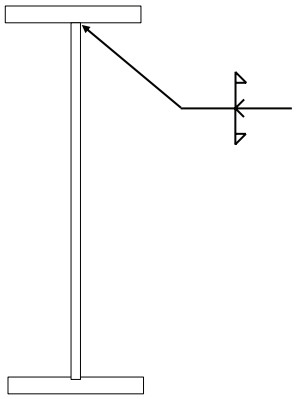

217

Crane rail not centered on runway web

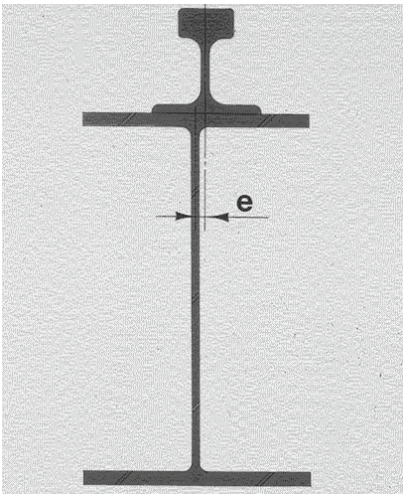

218

Crane rail not centered on runway web

Solution:

Adjust the rails to specified tolerance, may require runway beam realignment, or column realignment, align one side first then adjust opposite side.

Prevention:

1. Specify AISE tolerances.
2. Provide horizontally slotted holes in runway beams for alignment of runway.
3. Do not depend on ASTM A6 tolerances.
4. Adjustable rail connections.

219

ASTM A6 Tolerances

- ASTM sweep tolerance is 1/8 in. for each 10 ft. length of beam, thus a 40 ft. runway beam could have and offset of up to ½ in.
- In addition the web can be up to 3/16 in. off of the flange centerline.

220

AISE Tolerances

- The AISE tolerance on runway sweep is ¼ in. per 50 ft. length.
- Crane rails shall be centered on the crane girder webs whenever possible. In no case shall the rail eccentricity be greater than ¾ of the girder web thickness.
- See the AISE Technical Report #13 for additional tolerances.

221

Rail Clip Failure

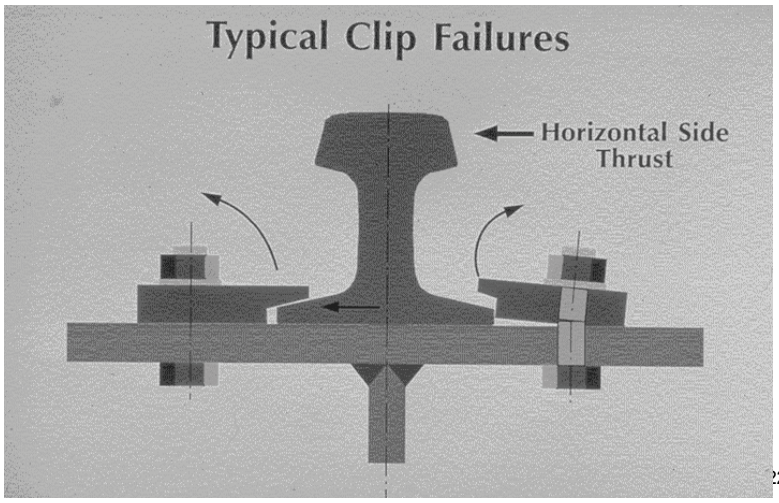

222

Rail Clips

Solution:

Replace with proper clips that:

- **Provide Positive Restraint in the Lateral Direction.**
- **Provide Allowance for Lateral Adjustment, both for Initial Installation as well as for Future Re-Railing of Re-Alignment.**
- **Provide Control of Longitudinal Rail Movement from Temperature Changes & Normal Flexing of the Girder.**
- **Virtually no maintenance.**

223

Hard Mounted Rail Clips

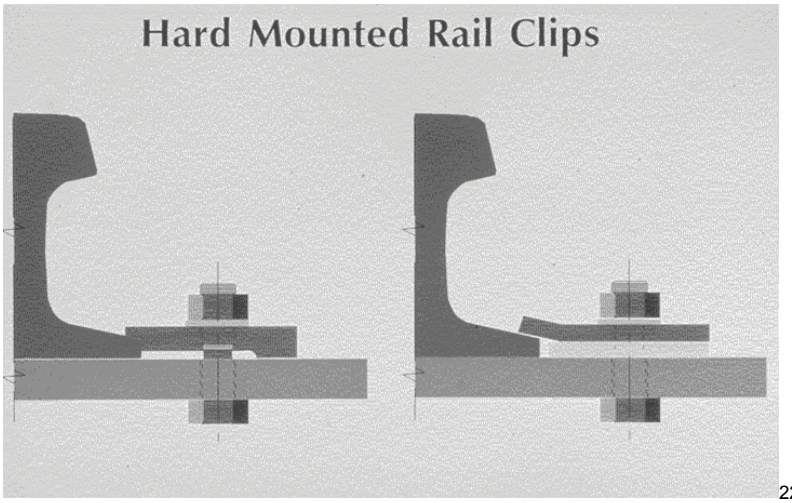

224

Adjustable Rail Clips

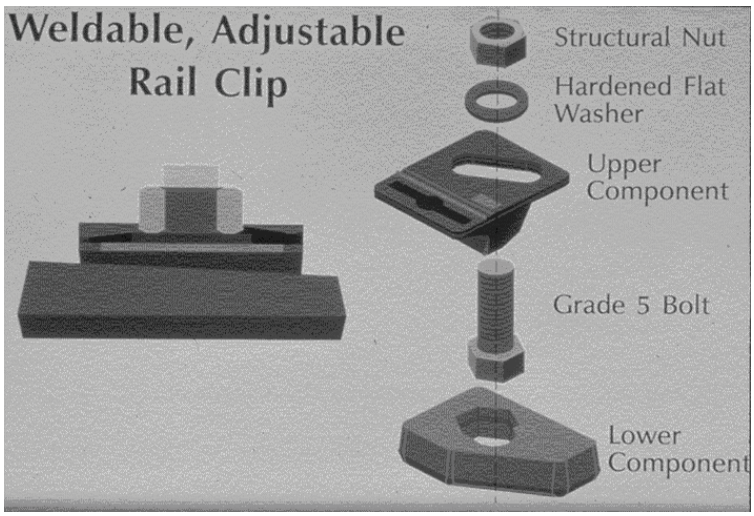

225

Gaulling of Crane Rails

226

Gaulling of Crane Rails

Solution:

Adjust the rails to specified tolerance, may require runway beam realignment, or column realignment, align one side first then adjust opposite side.

Prevention:

Maintain crane and the runway system to prevent skew.

227

Design Drawing Problems

- Problem Specifications
- Connection Design and Detail Information
- Connection Standards

228

Problem Specifications

- More restrictive than required for the project. (Copied from another job)
- Require the fabricator to complete the design in order to make the bid.
- Have conflicts between the drawing notes and the specifications.
- Design all shear connections for 0.75 UDL
- Design all moment connections for Mp

229

Problem Specifications

Avoid problem specifications by:

- Using recognized formats such as CSI or Master Spec.
- Make sure drawing notes agree with the specifications.
- Follow the requirements set forth in the AISC “Code of Standard Practice”.
- Make sure the drawings show all requirements unique to project.

230

Design of Connections

How to Reduce Connection Design and Detailing Problems

231

Design of Connections

Convey -

Connection Design/Detail Information Properly.

232

How to Convey Information needed to Design and Detail Connections

- Provide reactions for shear connections.
- Provide force envelopes for moment connections.
- Provide all forces for braced frames and truss connection.
- Use Standard AISC Connection details and schedules.
- Show representative details for special connections.

233

Connection Reaction Schedule

One Size Fits All – Not Recommended

CONNECTION SCHEDULE

BEAM SIZE	MINIMUM VERTICAL DESIGN REACTION R_u (KIP)
W36	250
W33	220
W30	190
W27	175
W24	155
W21, HSS20	140
W18	125
W16	115
W14	85
W12	80
W10, W8, HSS10	40

Note: Reactions will require web reinforcement for many coped sections

234

Connection Reactions Scheduled by Beam Weight – Not Recommended

BEAM

BEAM MARK	MIN. # BOLTS	REACTION (KIPS)	BEAM MARK	MIN. # BOLTS	REACTION (KIPS)
W8x10	2	19	W18x86A	5	83
W10x12	2	19	W18x97	5	83
W12x14	3	28	W18x106	5	83
W12x14A	3	50	W18x130	5	83
W12x16	3	28	W18x143	5	127
W12x19	3	28	W18x158	5	165
W12x22	3	28	W18x192	5	127
W12x22A	3	50	W18x211	5	127
W12x26	3	28	W18x283	5	165
W12x40	3	28	W18x311	5	175
W14x22	3	28	W21x44	6	56
W14x22A	3	38	W21x44A	6	76
W14x30	3	28	W21x44B	6	99
W14x34	3	28	W21x50	6	56
W14x53	3	28	W21x50A	6	76
W14x61	3	28	W21x57	6	56
W16x26	4	37	W21x62	6	56
W16x31	4	37	W21x62A	6	76
W16x36	4	37	W21x83	6	76
W18x35	5	47	W21x83A	6	99
W18x40	5	47	W21x93	6	76
W18x40A	5	63	W21x93A	6	99

Note: Same connection required for beams with reactions that vary over 100 kips.

235

Connection Reactions by % UDL – Not Recommended

BEAM SIZE	# of Pcs	SPAN Ft	DESIGN (kips)	0.75 UDL (kips)ASD	RBS (kips)ASD
W16X26	2	10’-0”	6	63.0	42
W16X26	11	28’-6”	21	22.5	42
W14x22	4	8’-6”	6	56.3	30
W14x22	2	23’-6”	17	21	30
W12X19	26	9’-6”	6	44	30

236

Reactions and Detail Information Shown on the Framing Plan

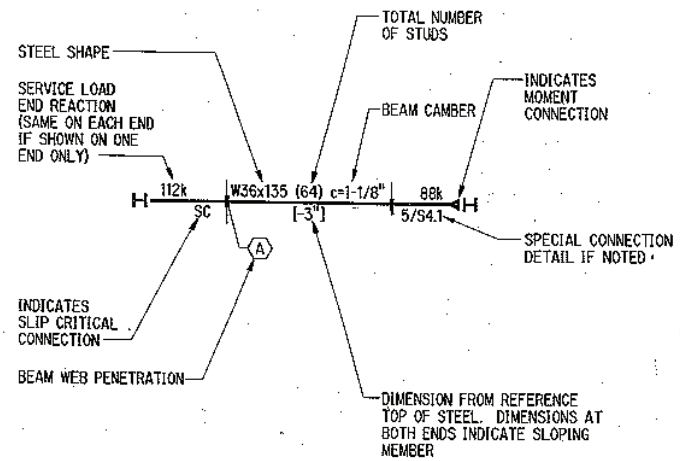

237

Connection Details to Avoid

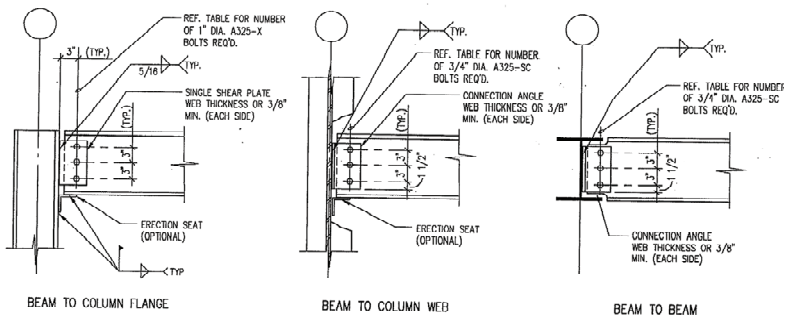

TYPICAL SHEAR CONNECTIONS

Shear plate	L's shop welded,	L's shop welded,
ea. side & large "X" bolts	thickness varies & bolts inside flg	thickness varies & bolts inside girder

238

Connection Standard
Single Angle - Beam to Girder

BOLTS: $\frac{3}{4}$"Ø A325–N
HOLES: $\frac{13}{16}$"Ø U.N.O.

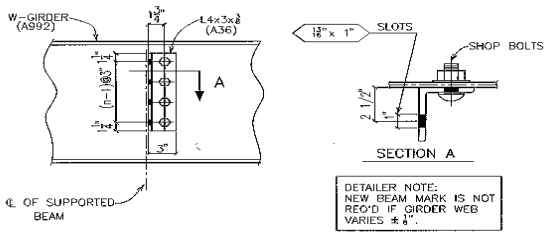

DETAILER NOTE:
NEW BEAM MARK IS NOT REQ'D IF GIRDER WEB VARIES ± $\frac{1}{8}$".

BEAM SIZE	NUMBER OF ROWS, n	CONN. DESIGN STRENGTH, KIPS*
W8, W10	2	18.8
W12, W14	3	35.5
W16	4	52.8
W18	5	69.8
W21	6	86.7
W24	7	103

NOTES:
1. REF. LRFD, 3RD ED.
2. * IF SPCECIFIED FACTORED END REACTION EXCEEDS CONNECTION DESIGN STRENGTH, USE DOUBLE ANGLE CONNECTION.

TYPICAL BEAM TO GIRDER CONNECTION | DATE: 01 - 01 - 03

239

Connection Standard
Double Angle - Bolted/Bolted

BOLTS: $\frac{3}{4}$"Ø A325 – N
HOLES: $\frac{13}{16}$"Ø U.N.O.

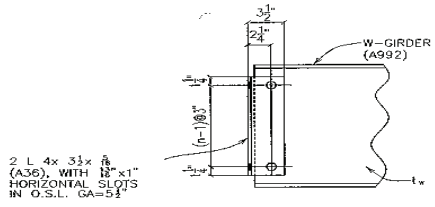

NUMBER OF ROWS, n	CONNECTION DESIGN STRENGTH FOR WEB THICKNESS, KIPS			
	tw=3/16"	tw=1/4"	tw=5/16"	tw>=3/8"
2	32.9	43.9	54.9	61.2
3	49.4	65.9	82.3	95.4
4		87.8	110	127
5			137	159
6				191
7				223
8				254
9				286
10				318

NOTES:
1. REF. LRFD, 3RD ED.
2. WHEN THIS CONNECTION IS USED FOR BEAM TO GIRDER CONNECTION, SEE CS–F3/4–12 FOR COPES.

TYPICAL GIRDER TO COLUMN CONNECTION | DATE: 01 - 01 - 03

240

OSHA CONNECTION @ COLUMN WEB

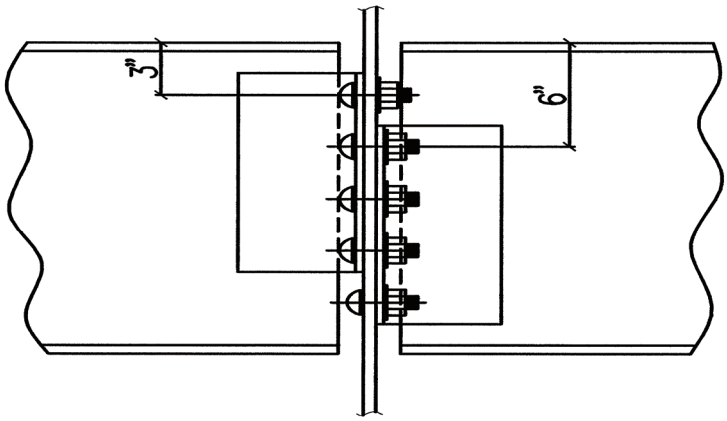

241

Single Plate Connection

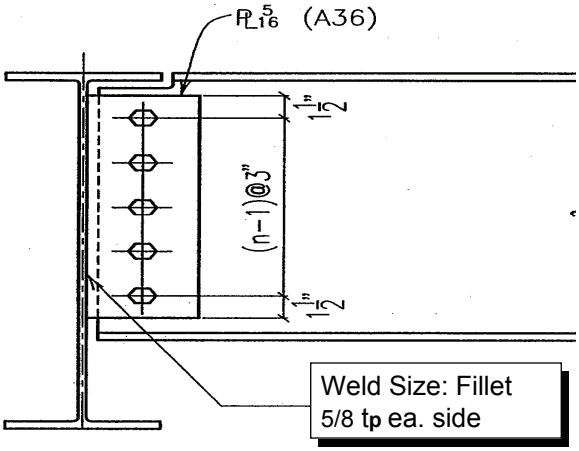

242

Single-Plate Shear Connection
13th Edition of AISC Manual

New Design Method

- **Conventional Configuration (prescriptive approach)**
  - Limit states automatically satisfied
  - Simplified design approach
- **Extended shear tabs**
  - Each limit state checked
  - Connection eccentricity explicitly considered

243

Single-Plate Shear Connection

Limit States

- Shear yield of plate
- Shear rupture of plate
- Bearing on plate or web
- Block shear of plate
- Shear of bolts
- Rupture of weld

244

Single-Plate Shear Connection 13th Edition of AISC Manual

- **Conventional Configuration – dimensional limitations**
  - Single vertical row of bolts
  - Number of bolts, 2 to 12
  - Bolt line to weld line distance no more than 3.5 in.
  - Standard or short slotted holes
  - L_{eh} equal to or greater than $2d_b$
  - L_{ev} must satisfy specified minimum in specification
  - Either plate or beam web must satisfy

245

Single-Plate Shear Connection

- **Conventional Configuration – design checks**
  - Eccentricity ignored for most cases
  - Bolt shear
  - Bolt bearing
  - Block shear rupture
  - Shear yielding
  - Shear rupture

246

"Conventional" Single Plate Design
13th Edition of AISC Manual

Plate
F_y = 36 ksi

Table 10–9a (continued)
Single-Plate Connections
Bolt, Weld, and Single-Plate Available Strengths, kips

3/4-in. diameter bolts

n	ASTM Desig.	Thread Cond.	Hole Type	Plate Thickness, in. 1/4 ASD	1/4 LRFD	5/16 ASD	5/16 LRFD	3/8 ASD	3/8 LRFD	7/16 ASD	7/16 LRFD	1/2 ASD	1/2 LRFD	9/16 ASD	9/16 LRFD
4 (L = 11 1/2)	A325 F1852	N	STD	34.8	52.2	42.4	63.6	42.4	63.6	42.4	63.6	—	—	—	—
			SSLT	34.7	52.0	42.4	63.6	42.4	63.6	42.4	63.6	—	—	—	—
		X	STD	34.8	52.2	43.5	65.3	52.2	78.3	53.0	79.5	—	—	—	—
			SSLT	34.7	52.0	43.4	65.1	52.0	78.1	53.0	79.5	—	—	—	—
	A490	N	STD	34.8	52.2	43.5	65.3	52.2	78.3	53.0	79.5	—	—	—	—
			SSLT	34.7	52.0	43.4	65.1	52.0	78.1	53.0	79.5	—	—	—	—
		X	STD	34.8	52.2	43.5	65.3	52.2	78.3	60.9	91.4	—	—	—	—
			SSLT	34.7	52.0	43.4	65.1	52.0	78.1	60.7	91.1	—	—	—	—
3 (L = 8 1/2)	A325 F1852	N	STD	25.6	38.3	31.8	47.7	31.8	47.7	31.8	47.7	—	—	—	—
			SSLT	25.6	38.3	31.8	47.7	31.8	47.7	31.8	47.7	—	—	—	—
		X	STD	25.6	38.3	31.9	47.9	38.3	57.5	39.8	59.6	—	—	—	—
			SSLT	25.6	38.3	31.9	47.9	38.3	57.5	39.8	59.6	—	—	—	—
	A490	N	STD	25.6	38.3	31.9	47.9	38.3	57.5	39.8	59.6	—	—	—	—
			SSLT	25.6	38.3	31.9	47.9	38.3	57.5	39.8	59.6	—	—	—	—
		X	STD	25.6	38.3	31.9	47.9	38.3	57.5	44.7	67.1	—	—	—	—
			SSLT	25.6	38.3	31.9	47.9	38.3	57.5	44.7	67.1	—	—	—	—

247

Connection Standard
Double Angle - Bolted / Welded
Shear and Axial Load

BOLTS: 3/4" Ø A325 – N
HOLES: 13/16" Ø U.N.O.

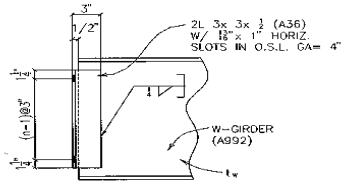

GIRDER SIZE	NUMBER OF ROWS, n	HORIZONTAL CONNECTION DESIGN STRENGTH, KIPS*
W8, W10	2	32.6
W12,W14	3	50.5
W16	4	68.3
W18	5	86.1
W21	6	104
W24	7	122
W27	8	140
W30	9	157
	10	175

NOTES:
1. REF. LRFD 3RD. ED.
2. * IS BASED ON ØF_n= 5.94 KIPS/IN FOR t= 1/2", b= 13/8" FROM TABLE 15– 1 ON PAGE 15– 19 IN LRFD, 3RD ED.

GIRDER TO COLUMN CONNECTION WITH TENSILE HORIZONTAL FORCE | DATE: 01 - 01 - 03

248

Connection Standard
Beam Cope Detail Dimensions

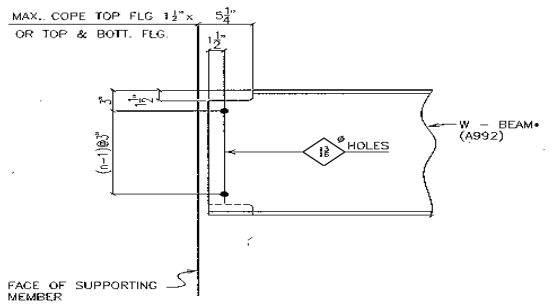

NOTES:
1.* SEE TABLES ON PAGE 2 FOR BEAM END DESIGN STRENGTH FOR DIFFERENT COPES.
2. IF SPECIFIED FACTORED END REACTION EXCEEDS COPED BEAM END DESIGN STENGTH OR LARGER COPE IS REQUIRED, PROVIDE FINAL DETAIL OF BEAM END TO LEJEUNE STEEL COMPANY FOR CHECKING.

COPED BEAM END DETAIL | DATE: 01 - 01 - 03

249

Connection Standard
Beam Cope Capacities

BEAM SIZE	1 1/2"x 5 1/4" COPES													
	COPE AT TOP FLANGE ONLY							COPE AT TOP AND BOTTOM FLANGE						
	NUMBER OF ROWS, n							NUMBER OF ROWS, n						
	2	3	4	5	6	7	8	2	3	4	5	6	7	8
W8	17													
W10	27.6							14.2						
W12	29	41.4						25	25					
W14		47.7							41.6					
W16		51.8	67.3						51.8	63.7				
W18		62.2	80.8	99.5					62.2	80.8	99.5			
W21			94.3	116	138					94.3	116	138		
W24			106	131	155	180				106	131	155	180	
W27				152	181	210	238				152	181	210	238

NOTES:
1. THE DESIGN STREGTH HAS BEEN CALCULATED FOR THE LIGHTEST BEAM IN A GROUP, AND IT IS CONSERVATIVE FOR HEAVIER BEAMS IN THE SAME GROUP.
2. THESE TABLES ARE CONSERVATIVE FOR SMALLER COPES.
3. 1½"- VERTICAL DIMENSION & 3¾" & 5¼"- HORIZONTAL DIMENSIONS.

COPED BEAM END VERTICAL DESIGN STRENGTH | DATE: 01 - 01 - 03

250

Connection Standard
Skewed Single Plate Shear Connection

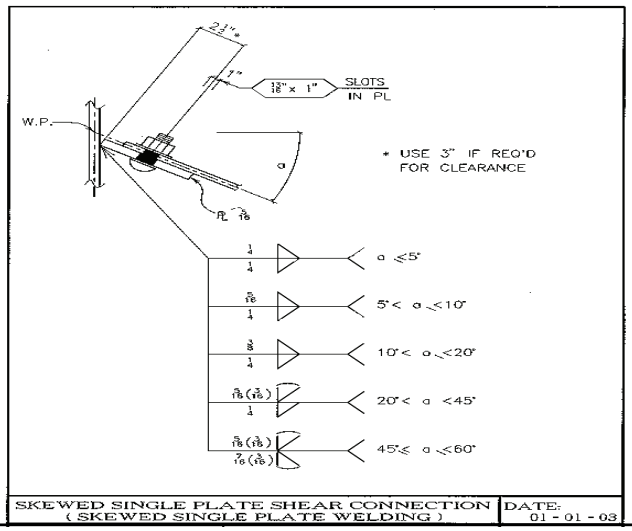

251

HSS Connections to Avoid

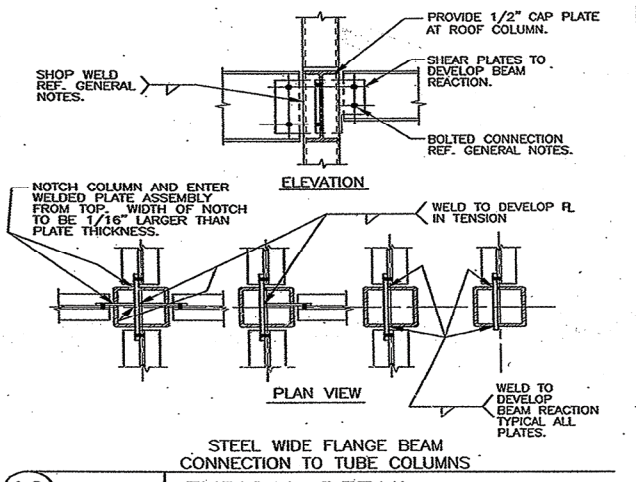

252

Construction Standard - Single Plate Connection to HSS Column

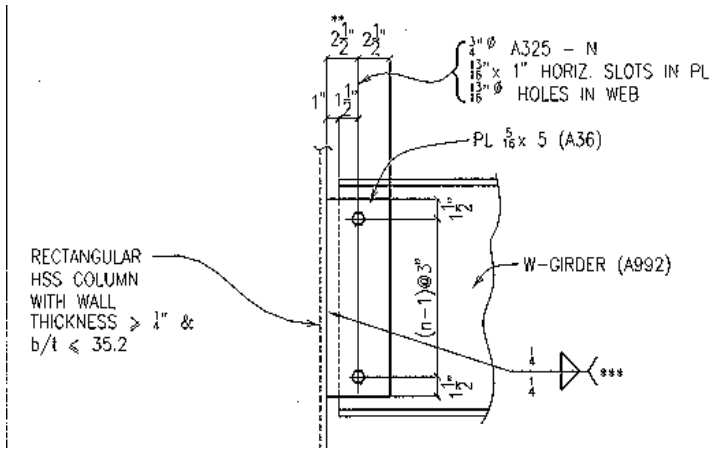

See AISC Manual for Single Plate Capacities

253

Connection Standard Double Angle - Beam to HSS Column

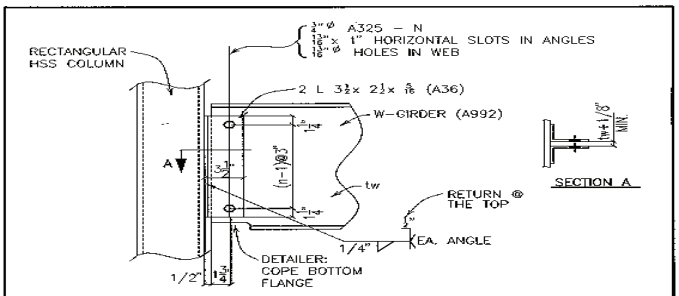

NUMBER OF ROWS, n	CONNECTION DESIGN STRENGTH FOR WEB THICKNESS, KIPS		
	tw=3/16"	tw=1/4"	tw>=5/16"
2	31.9	31.9	31.9
3	49.4	65.0	65.0
4		87.8	101
5			137
6			173
7			209
8			244
9			279
10			314

NOTES:
1. REF. LRFD, 3RD ED.

254

Problem: How to Convey Design Requirements for Moment Frame

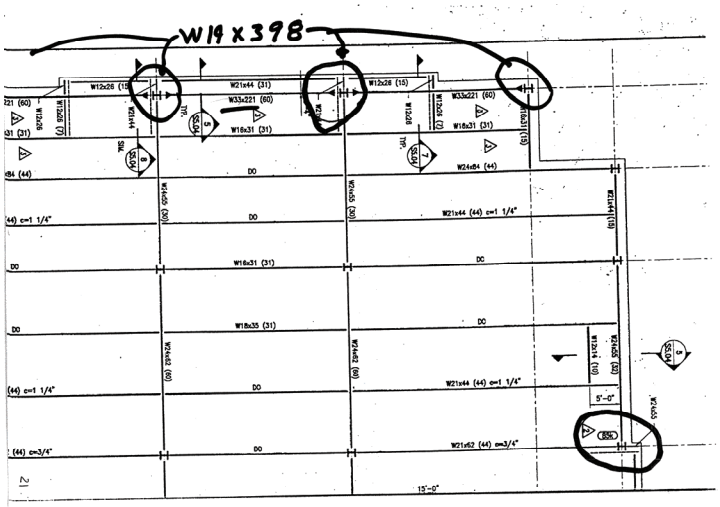

255

Design Drawing Presentation: Full Moment Connection Detail

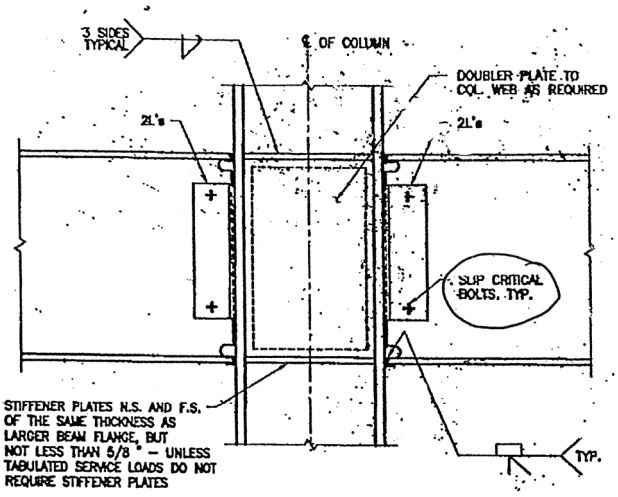

256

Design Drawing Solution: CJP Column Splice Detail

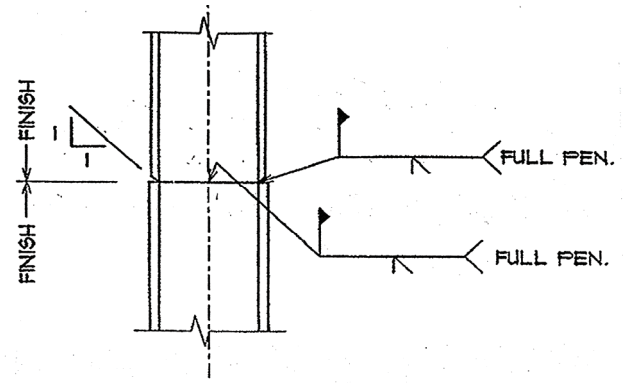

DETAIL AT COLUMN WELDED TENSION SPLICE COLUMNS OF SAME SERIES

SEE NOTES "A", "F" & "G"

257

Fully Detailed CJP Column Splice

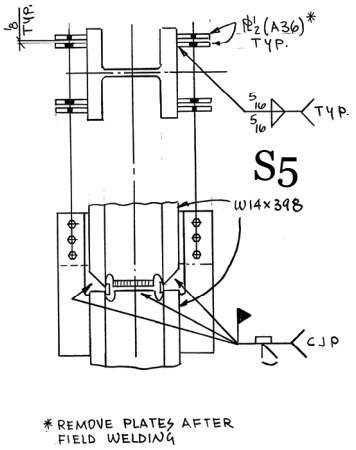

CJP WELD COLUMN SPLICE

Structural Notes:

- **Provide CVN per ASTM A6- S30**
- **Preheat prior to thermal cutting**
- **Grind all weld access holes**
- **Inspect access holes with DP or MT**
- **Preheat prior to welding**
- **UT after welding**

258

Moment Diagram for Frame Column

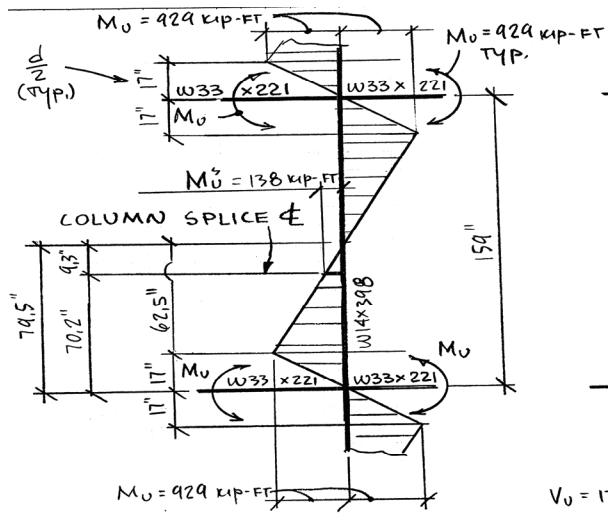

259

Solution: End Plate Moment Connection Fillet Welded to W33x221

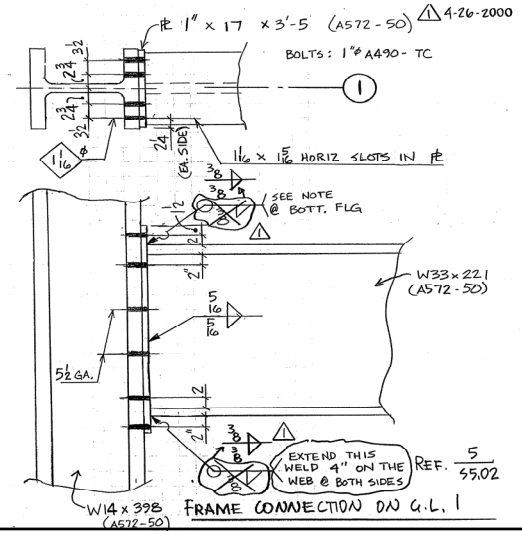

260

Solution: Use Bolted Flange Plates & PJP Weld Web Splice for Column

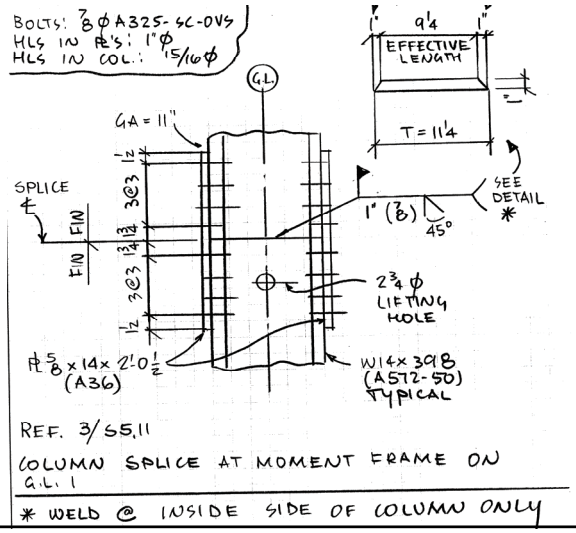

261

Problem: Design a connection for cantilever where span = depth

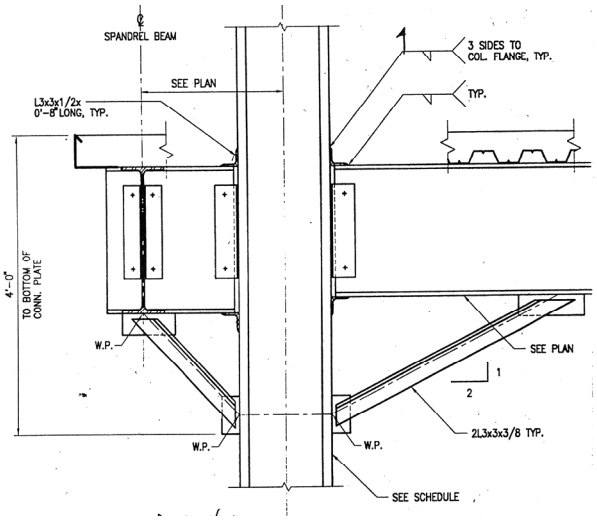

262

Solution: Provide Schedule with Actual Moment Envelope

MOMENT CONNECTION SCHEDULE

MARK	MOMENT (FT–KIPS)	SHEAR (KIPS)	REMARKS
MC–1	+202 / –68	43	SEE PLANS FOR AXIAL LOAD
MC–2	+289 / –97	65	
MC–3	+359 / –120	126	
MC–3A	+330 / –110	75	
MC–4	+441 / –147	120	
MC–5	+744 / –248	153	
MC–6	+1223 / –408	255	

263

Moment Connection Design Full Envelope on Framing Plan

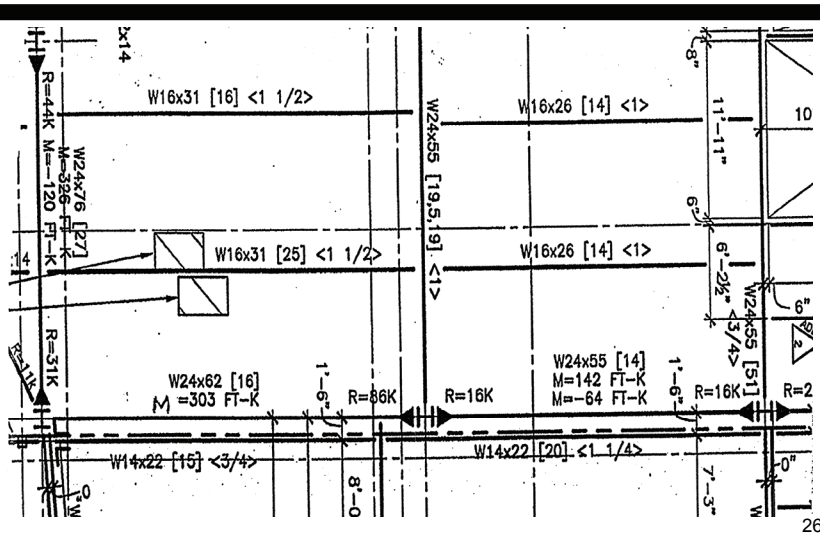

264

Solution: Design End Plate Moment Connection for Actual Loads

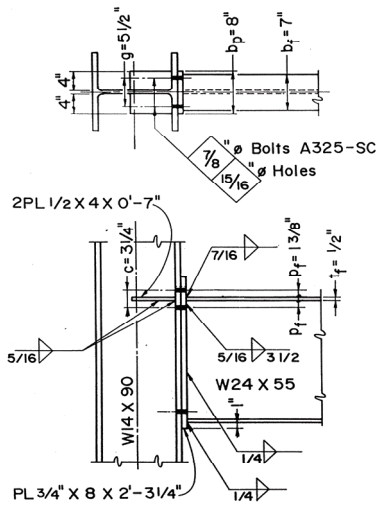

265

Field Welded Flange with Bolted End Plate for Shear & Comp.

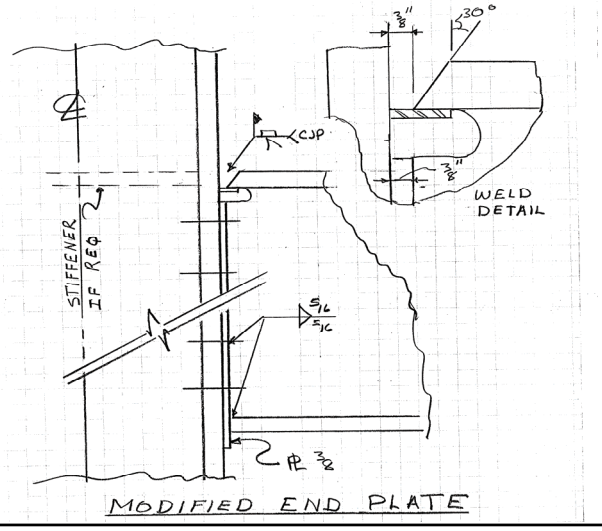

266

Member Selection Without Considering Connections

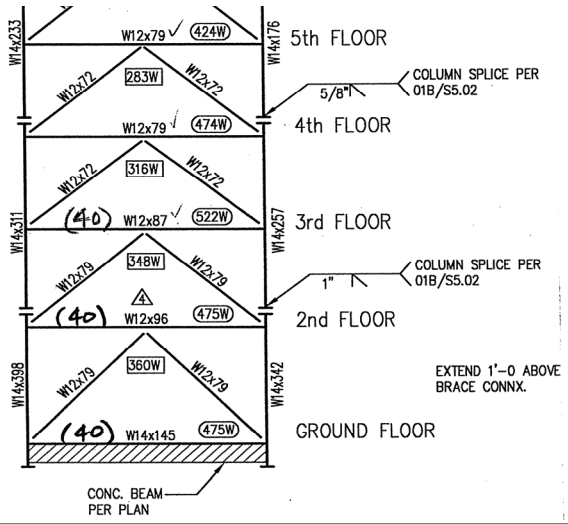

267

Beam Web Reinforcement Required For Connections to W12 and W14 Braces

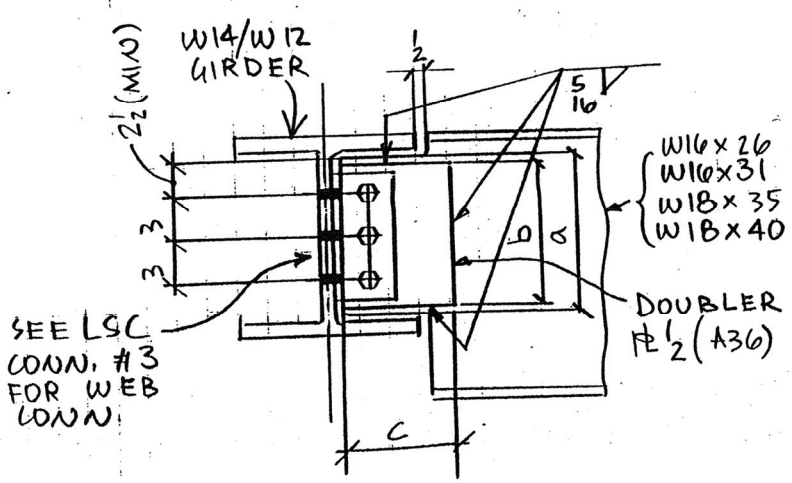

8

Brace Connection Detail
Designed for any and all forces

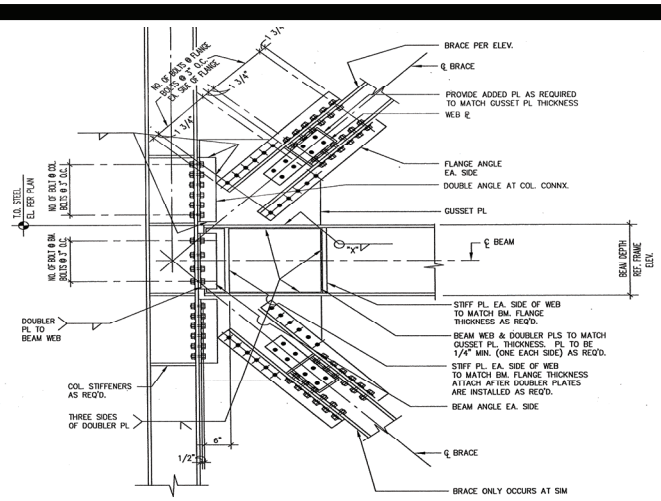

BRACE/BEAM TO COLUMN FLANGE CONNECTION

269

Bracing Connection Detail
Force Transfer and Erection ???

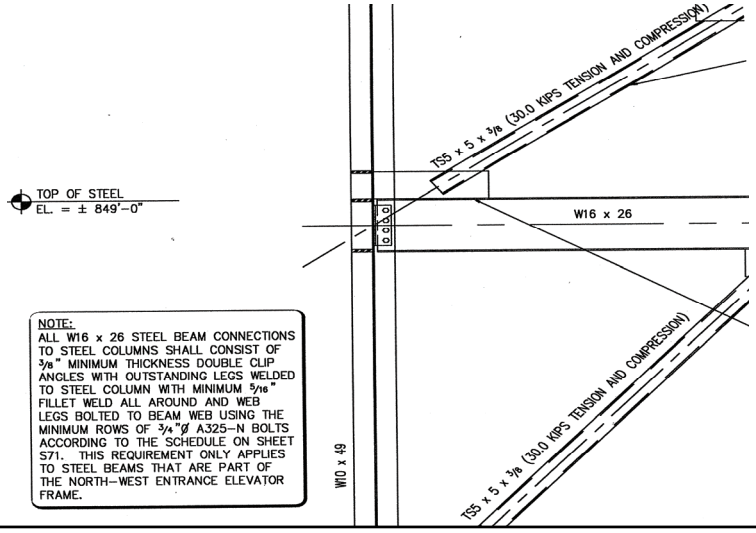

NOTE:
ALL W16 x 26 STEEL BEAM CONNECTIONS TO STEEL COLUMNS SHALL CONSIST OF 3/8" MINIMUM THICKNESS DOUBLE CLIP ANGLES WITH OUTSTANDING LEGS WELDED TO STEEL COLUMN WITH MINIMUM 5/16" FILLET WELD ALL AROUND AND WEB LEGS BOLTED TO BEAM WEB USING THE MINIMUM ROWS OF 3/4"Ø A325-N BOLTS ACCORDING TO THE SCHEDULE ON SHEET S71. THIS REQUIREMENT ONLY APPLIES TO STEEL BEAMS THAT ARE PART OF THE NORTH-WEST ENTRANCE ELEVATOR FRAME.

270

Bracing Forces -Tension & Comp. Equilibrium Condition?

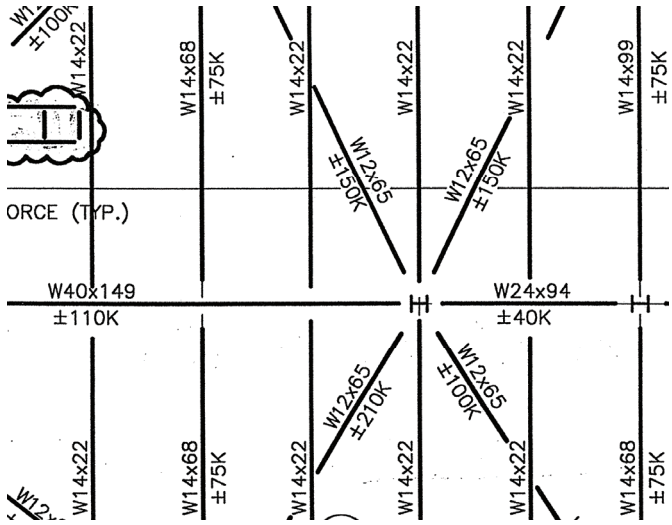

271

Provide for Force Transfer by using continuous gusset plate

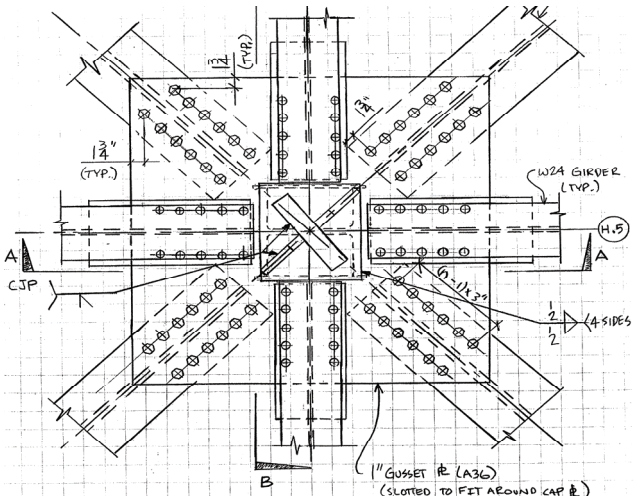

272

Problem: How to design bracing for least cost

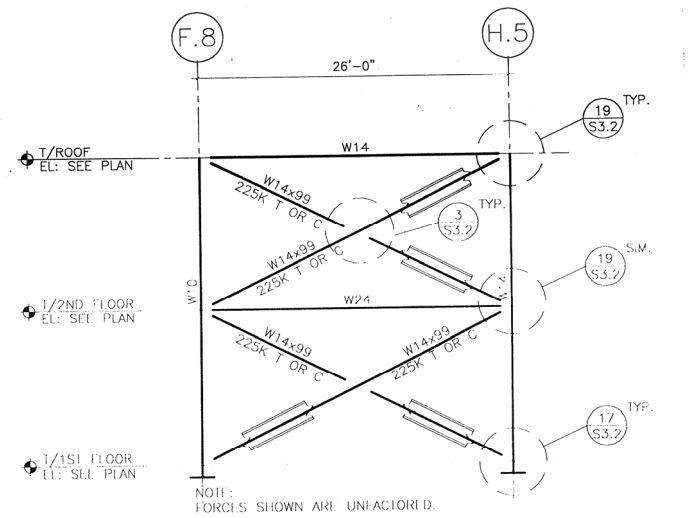

273

Solution: Redesign brace to chevron configuration

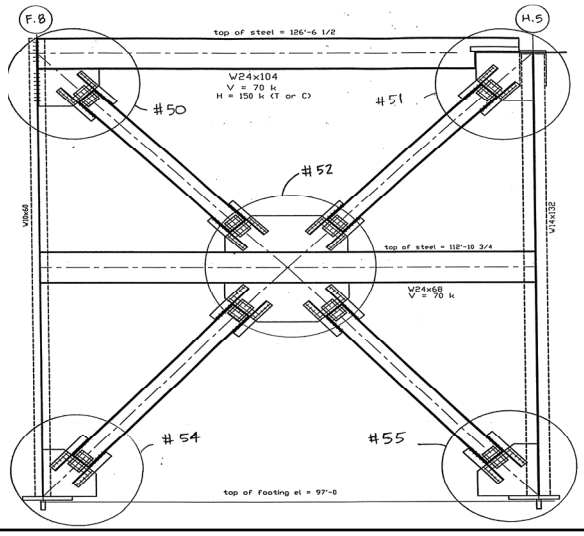

274

Problem: Develop a tough connection test for the fabricator

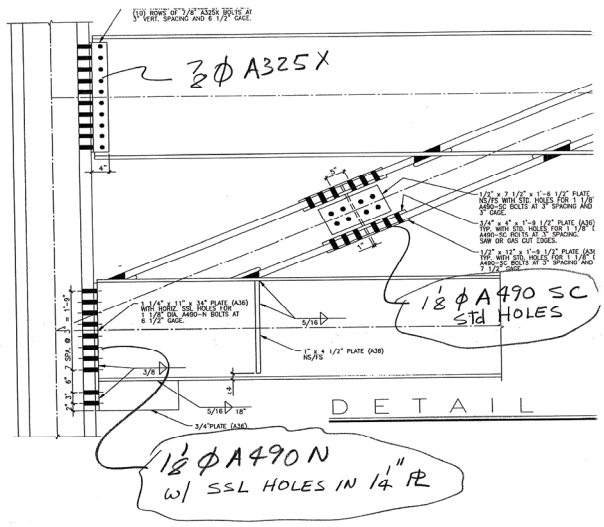

275

Problem: See how many braces can fit in a bay?

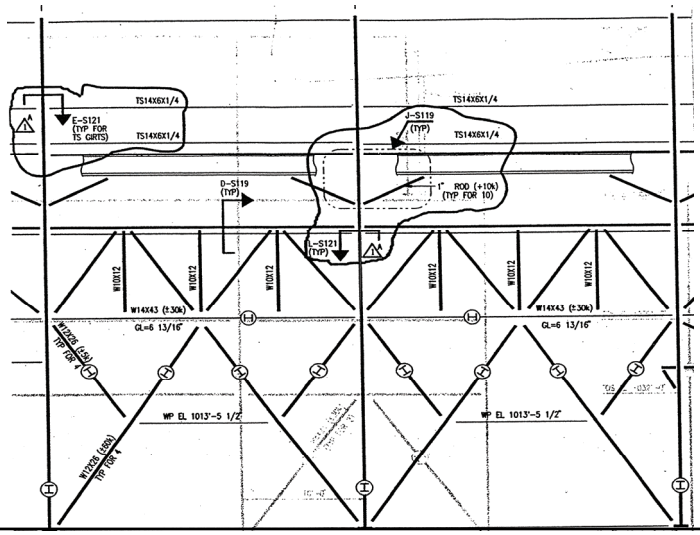

276

Problem: Design truss connection using load schedules

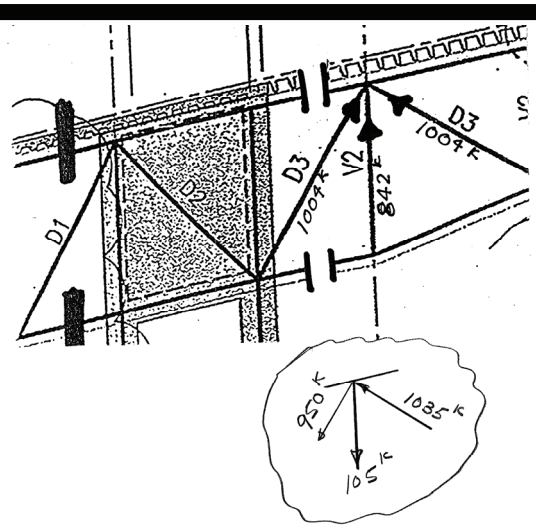

Member loads from schedule

Equilibrium loads for joint

277

Force Transfer Format for Bracing Connections

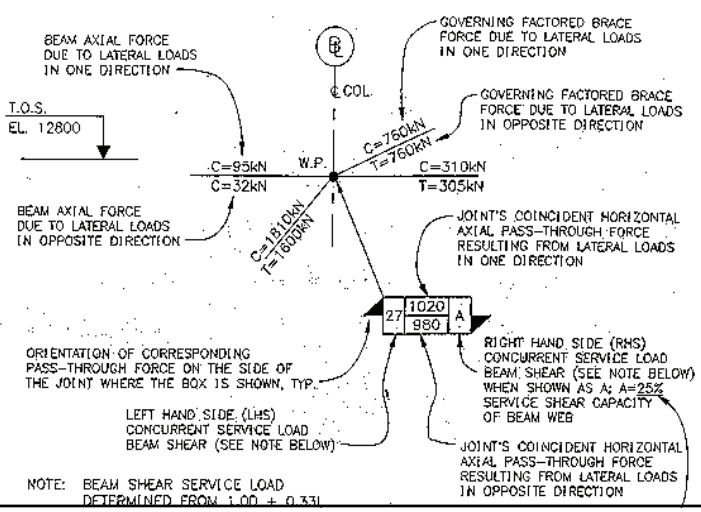

8

Problem: Unbraced Column with Lateral Load

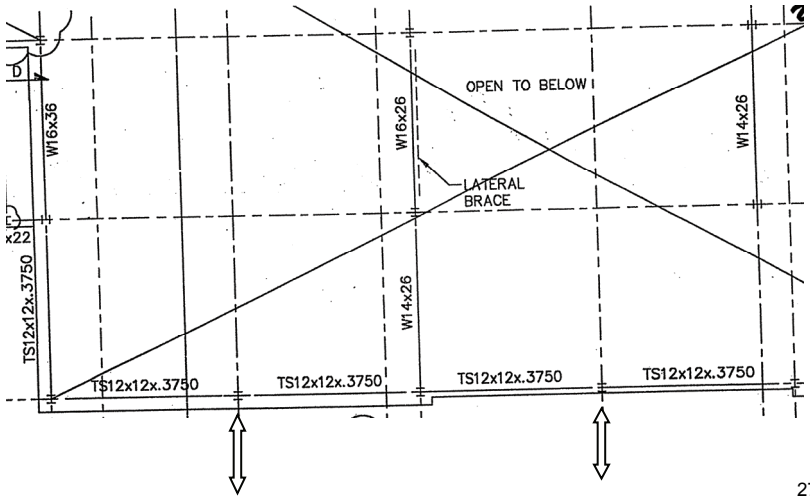

279

Problem: Column Braced Laterally by LH Joist

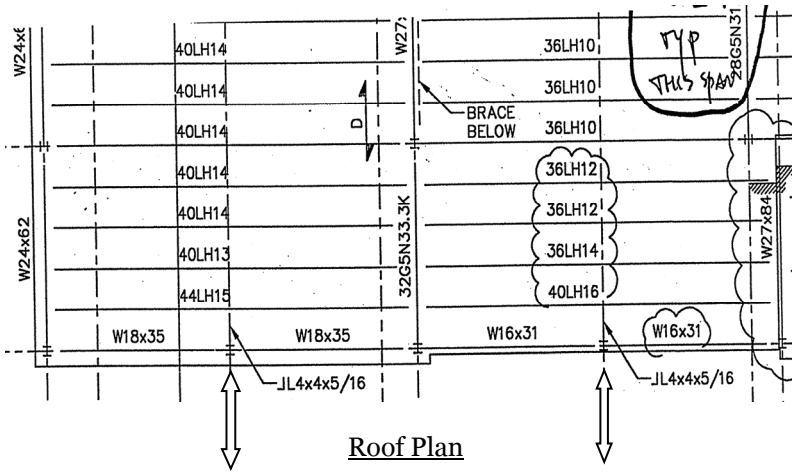

Roof Plan

280

Solution: Provide Double Angle Struts extending three spaces

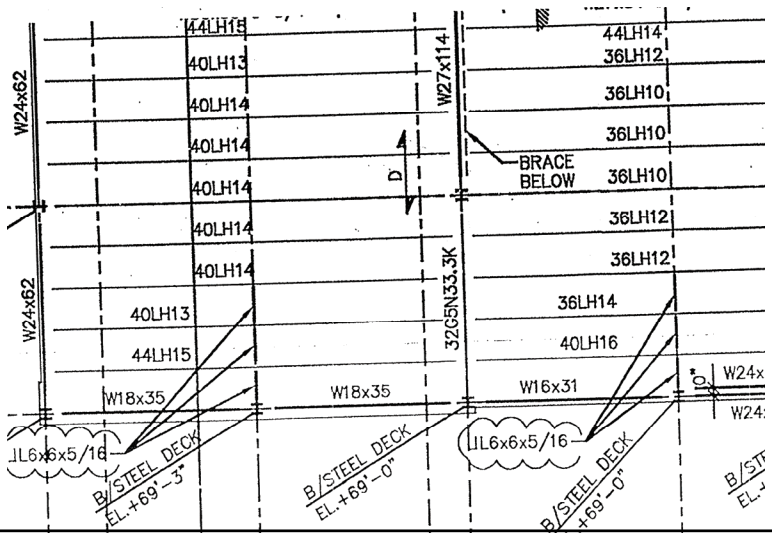

281

Problem: Computers work to centerline of members

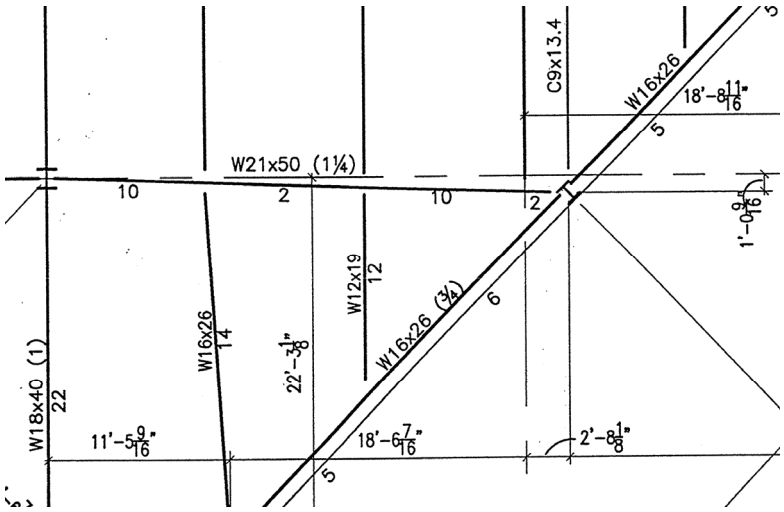

282

Problem: Computers do not check for constructability

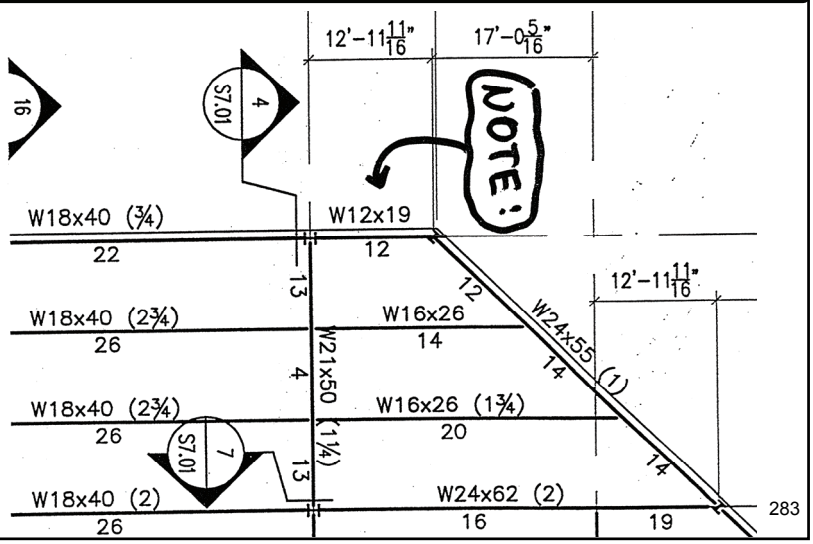

283

Spandrel Beam Detail

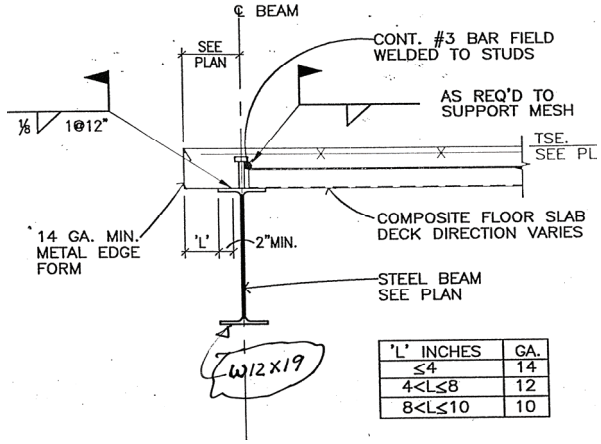

'L' INCHES	GA.
≤4	14
4<L≤8	12
8<L≤10	10

1 **SECTION**
TYP. DECK BRG. AT SLAB EDGE

Tolerances:
Edge Form - 3/8" ±
Beam – 1"± min

Bearing Widths:
Edge Form–2" min
Deck brg– 1¾"min
Stud - 1" @ Ctr

284

Problem: Cantilever Beam Connection Safety and Constructability

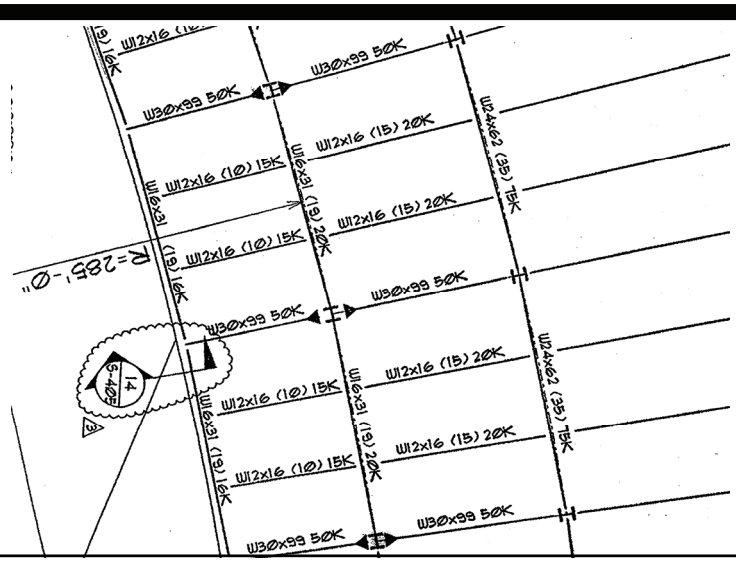

285

Connection Standard Shop Splice Detail for Beam

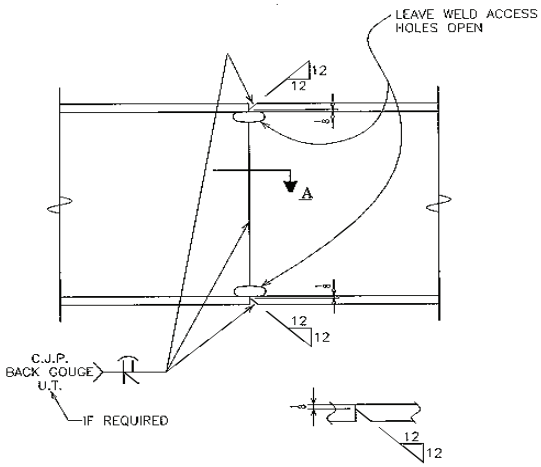

286

Member Selection Guidelines

- W12 min. depth beam for floor framing (use W14 if girder requires large cope).
- Avoid beams with 4-inch flanges at:
  - Spandrel beams with adjustable edge form.
  - Beams requiring bolted flange connections.
  - Locations where joists frame from each side.
- Composite beams:
  - Limit deflection to avoid large cambers.
  - Use minimum % of composite to limit studs.
  - Avoid studs if possible on infill beams parallel to deck ribs.

287

Shear Connection Guidelines

- Show Reactions on framing plans. More economical and helps avoid errors and RFI's.
- Use AISC Standard Details:
  - Dbl Angle - bolted / bolted or bolted / welded.
  - Single Angle - for beam to beam.
  - Single Plate - for beam to beam & skewed.
  - End Plate - heavy skewed connections.
- Show special connections.

288

Moment Connection Guidelines

- Provide actual moment envelope.
- Design considerations:
  - End plates may be limited by bolts or column flange bending capacity.
  - CJP welds are a “no brainer” but generally more expensive.
  - Top and bottom bolted plates are an option if less than Mp required.
- Size column to avoid reinforcement.
  (See AISC Website for steel tools program)

289

Cantilever Design Guidelines

- Provide actual moment and shear forces.
- Indicate if camber is required.
- Use end plate connections where possible for erection ease and safety.
- Shop weld short cantilevers where possible.
- Consider making the beam continuous and stacking columns on long cantilevers.

290

Bracing Connection Guidelines

- Show all forces for complete load path and provide equilibrium condition at joint or provide actual transfer forces.
- Forces should include all drag strut forces and diaphragm connection details.
- Consider modifying work points for extreme connection geometry.
- Allow oversize holes and field welding where required for constructability.

291

Other Questions

Answers to many other questions can be found in information available on the AISC website at <www.aisc.org> or in the AISC Manual of Steel Construction 13th Edition.

292

Acknowledgements

- AISC Solution Center.
- Vulcraft Corporation, a Division of Nucor.
- M. Thomas Ferrell, Ferrell Engineering.
- Gantrex Corporation.

293

Questions from the Audience

294

THANK YOU FOR ATTENDING

295

There's always a solution in steel.

American Institute of Steel Construction, Inc.
One East Wacker Drive, Suite 700
Chicago, IL 60601-1802

312.670.2400 www.aisc.org